AEG

DIMENSION AND INSTALLATION GUIDE

8000 SERIES

NBB8S731AT

BUILT-IN SINGLE STEAM OVEN

Dimensions	Width (mm)	Height (mm)	Depth (mm)
Underbench cut-out (mm)	560	600	550
Carbinet cut-out (mm)	560	590	550
Product (mm)	595	594	567

UNDERBENCH

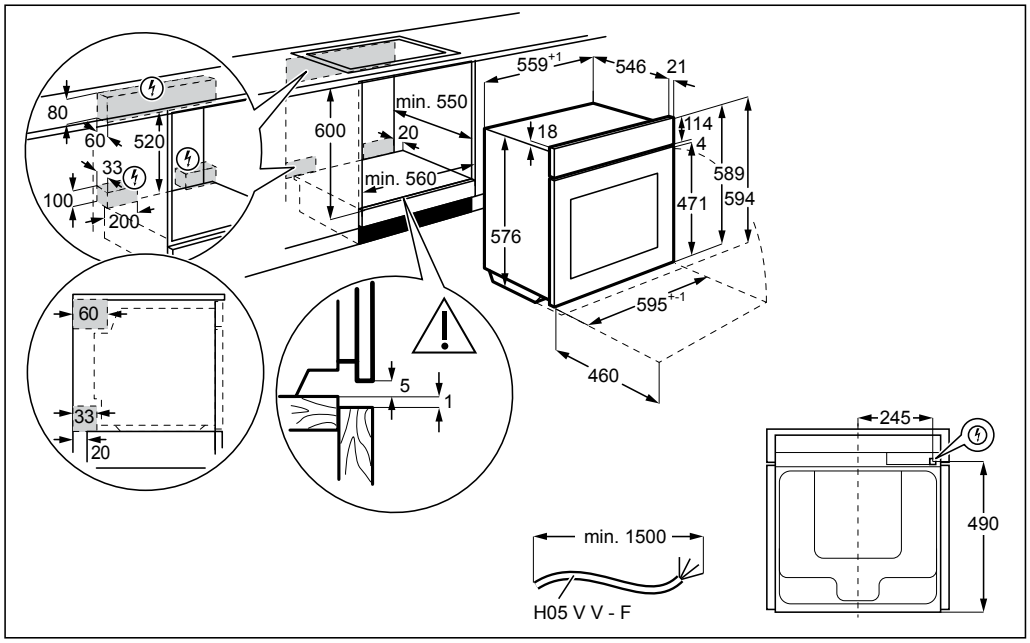

CABINET

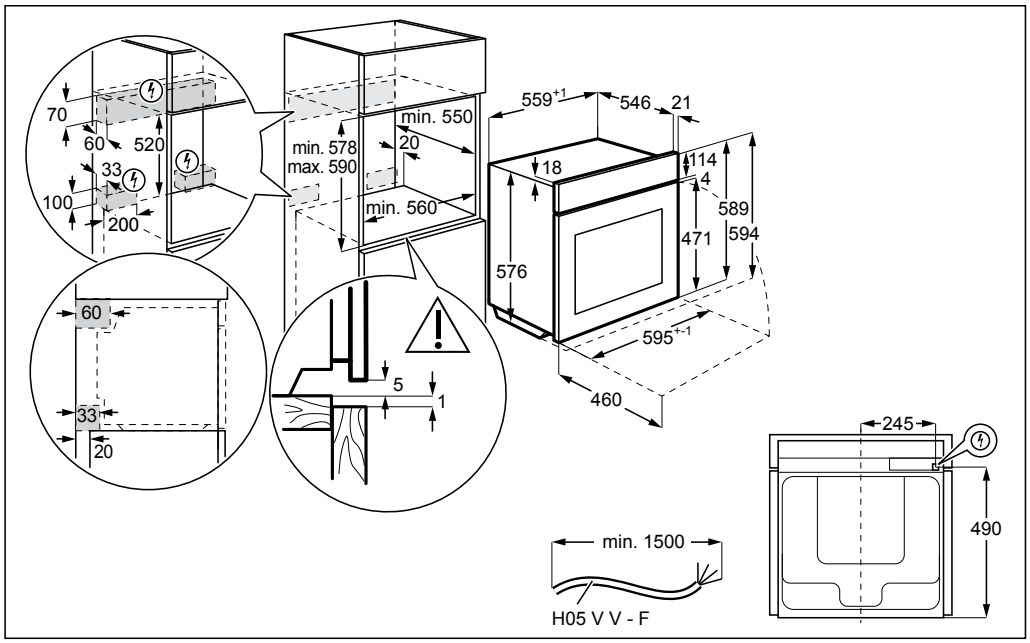

IMPORTANT

These dimensions are a guide only. All measurements are in millimetres (mm).

For complete installation instructions, refer to the manual provided with product.

© 2025 Electrolux S.E.A PTE. LTD. AEG_DIM_NBB8S731AT_Mar25