NEFF

cook. create. inspire.

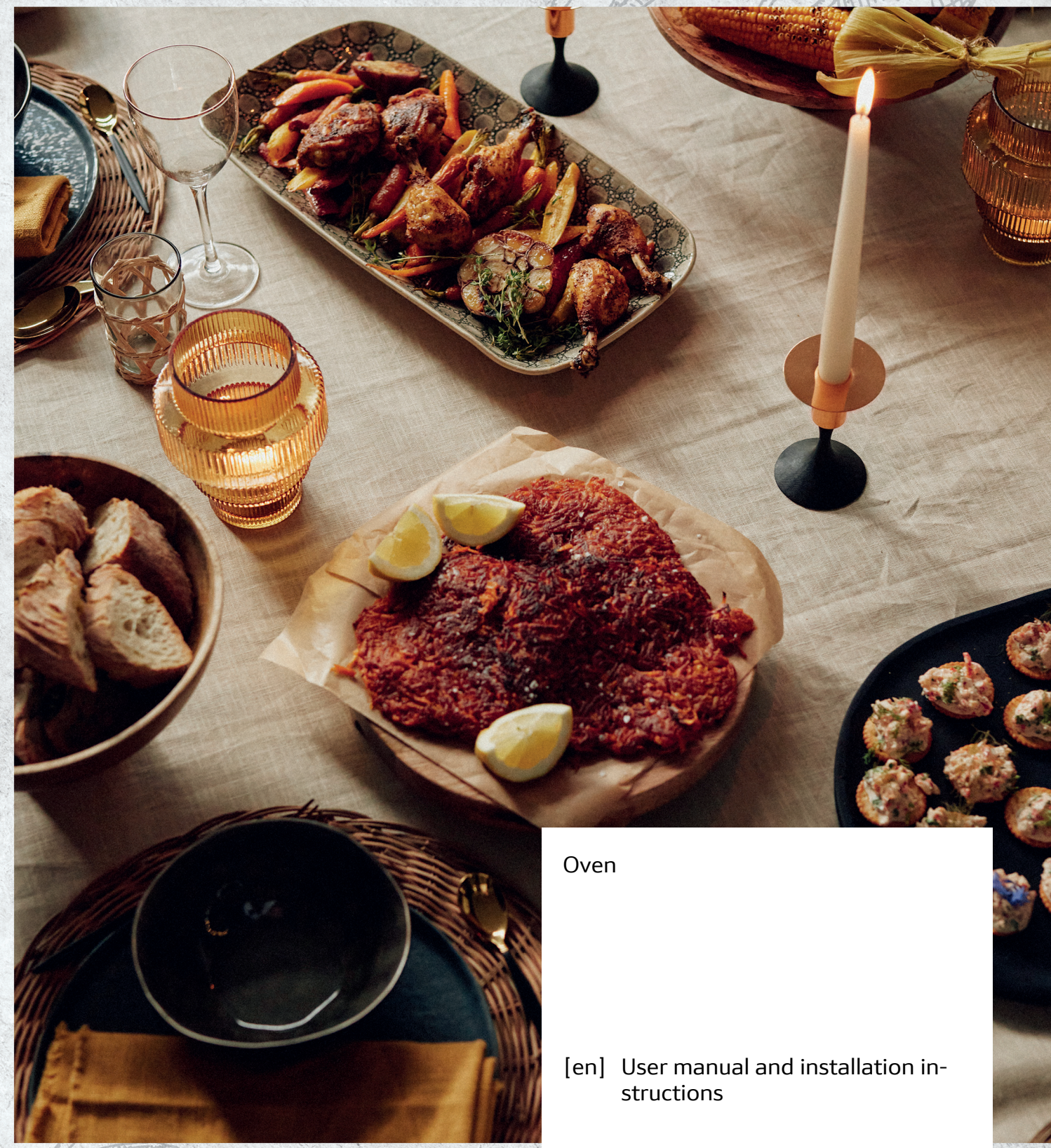

Oven

[en] User manual and installation instructions

B59CR71.0A

You can find additional information and explanations online.
Scan the QR code on the title page.

Table of contents

INFORMATION FOR USE

1 Safety ... 2
2 Preventing material damage ... 5
3 Environmental protection and saving energy ... 5
4 Familiarising yourself with your appliance ... 6
5 Functions ... 7
6 Accessories ... 9
7 Before using for the first time ... 10
8 Basic operation ... 11
9 Time-setting options ... 12
10 Dishes ... 14
11 Favourites ... 15
12 Childproof lock ... 15
13 Rapid heating ... 15
14 Basic settings ... 16
15 Home Connect ... 17
16 Cleaning and servicing ... 19
17 "Pyrolytic self-cleaning" cleaning function ... 20
18 "Easy Clean" cleaning aid ... 22
19 Drying ... 22
20 Rails ... 23
21 Appliance door ... 23
22 Troubleshooting ... 28
23 Disposal ... 30
24 Customer Service ... 30
25 Information regarding Free and Open Source Software ... 30
26 Declaration of Conformity ... 31
27 How it works ... 31

28 INSTALLATION INSTRUCTIONS ... 38
28.2 General installation instructions ... 39

⚠ 1 Safety

Observe the following safety instructions.

1.1 Definition of the signal words

This is where you can find explanations for the safety signal words used in this manual.

⚠ WARNING
This indicates that death or serious injuries may occur as a result of non-observance of this warning.

ATTENTION
This indicates that damage to the appliance or other material damage may occur as a result of non-compliance with this warning.

Note: This alerts you to important information.

1.2 General information

- Read this instruction manual carefully.
- Keep the instruction manual and the product information safe for future reference or for the next owner.
- Do not connect the appliance if it has been damaged in transit.

1.3 Intended use

This appliance is designed only to be built into kitchen units. Read the special installation instructions.
Only a licensed professional may connect appliances without plugs. Damage caused by incorrect connection is not covered under the warranty.

Only use this appliance:
- To prepare meals and drinks.
- in private households and in enclosed spaces in a domestic environment.
- Up to an altitude of 4000 m above sea level.

1.4 Restriction on user group

Do not let children play with the appliance. Children must not perform cleaning or user maintenance unless they are at least 15 years old and are being supervised.

Keep children under the age of 8 years away from the appliance and power cable.

1.5 Safe use

Always place accessories in the cooking compartment the right way round.
→ *"Accessories", Page 9*

⚠ WARNING – Risk of fire!
Combustible objects that are left in the cooking compartment may catch fire.
- Never store combustible objects in the cooking compartment.
- If smoke is emitted, the appliance must be switched off or the plug must be pulled out and the door must be held closed in order to stifle any flames.

Loose food remnants, fat and meat juices may catch fire.
- Before using the appliance, remove the worst of the food residues and remnants from the cooking compartment, heating elements and accessories.

Opening the appliance door creates a draught. Greaseproof paper may come into contact with the heating element and catch fire.
- Never place greaseproof paper loosely over accessories when preheating the appliance and while cooking.
- Always cut greaseproof paper to size and use a plate or baking tin to hold it down.

⚠ WARNING – Risk of burns!
The appliance and its parts that can be touched become hot during use.
- Caution should be exercised here in order to avoid touching heating elements.
- Young children under 8 years of age must be kept away from the appliance.

Accessories and cookware get very hot.
- Always use oven gloves to remove accessories or cookware from the cooking compartment.

When the cooking compartment is hot, any alcoholic vapours inside may catch fire. The appliance door may spring open. Hot steam and jets of flame may escape.
- Only use small quantities of drinks with a high alcohol content in food.
- Do not heat spirits (≥ 15% vol.) when undiluted (e.g. for marinating or pouring over food).
- Open the appliance door carefully.

⚠ WARNING – Risk of scalding!
The accessible parts of the appliance become hot during operation.
- Never touch these hot parts.
- Keep children at a safe distance.

Hot steam may escape when you open the appliance door. Steam may not be visible, depending on the temperature.
- Open the appliance door carefully.
- Keep children at a safe distance.

If there is water in the cooking compartment when it is hot, this may create hot steam.
- Never pour water into the cooking compartment when the cooking compartment is hot.

⚠ WARNING – Risk of injury!
Scratched glass in the appliance door may develop into a crack.
- Do not use any harsh or abrasive cleaners or sharp metal scrapers to clean the glass on the oven door, as they may scratch the surface.

The appliance and its parts that can be touched may have sharp edges.
- Take care when handling and cleaning them.
- If possible, wear protective gloves.

The hinges on the appliance door move when the door is opened and closed, which could trap your fingers.
- Keep your hands away from the hinges.

Components inside the appliance door may have sharp edges.
- Wear protective gloves.

Alcoholic vapours may catch fire in the hot cooking compartment, and the appliance door may spring open and may fall off. The door panels may shatter and fragment.
→ *"Preventing material damage", Page 5*
- Only use small quantities of drinks with a high alcohol content in food.
- Do not heat spirits (≥ 15% vol.) when undiluted (e.g. for marinating or pouring over food).
- Open the appliance door carefully.

⚠ WARNING – Risk of electric shock!
Improper repairs are dangerous.
- Repairs to the appliance should only be carried out by trained specialist staff.
- Only use genuine spare parts when repairing the appliance.
- If the power cord or the appliance power cable of this appliance is damaged, it must be replaced with a special power cord or special appliance power cable, which is

available from the manufacturer or its Customer Service.
- If the power cord of this appliance is damaged, it must be replaced by trained specialist staff.

If the insulation of the power cord is damaged, this is dangerous.
- Never let the power cord come into contact with hot appliance parts or heat sources.
- Never let the power cord come into contact with sharp points or edges.
- Never kink, crush or modify the power cord.

An ingress of moisture can cause an electric shock.
- Do not use steam- or high-pressure cleaners to clean the appliance.

If the appliance or the power cord is damaged, this is dangerous.
- Never operate a damaged appliance.
- Never pull on the power cord to unplug the appliance. Always unplug the appliance at the mains.
- If the appliance or the power cord is damaged, immediately unplug the power cord or switch off the fuse in the fuse box.
- Call customer service. →*Page 30*

Once the appliance has been installed, the openings in the back panel of the appliance must not be accessible to children.
- Read the special installation instructions.

⚠ WARNING – Risk of suffocation!

Children may put packaging material over their heads or wrap themselves up in it and suffocate.
- Keep packaging material away from children.
- Do not let children play with packaging material.

Children may breathe in or swallow small parts, causing them to suffocate.
- Keep small parts away from children.
- Do not let children play with small parts.

1.6 Cleaning function

⚠ WARNING – Risk of fire!

Loose food remnants, fat and meat juices may catch fire when the cleaning function is in progress.
- Before you start the cleaning function, always remove coarse dirt from the cooking compartment.
- Never clean accessories at the same time.

The outside of the appliance gets very hot when the cleaning function is in progress.
- Never hang combustible objects, e.g. tea towels, on the door handle.
- Leave the front of the appliance clear.
- Keep children at a safe distance.

If the door seal is damaged, a large amount of heat is generated around the door.
- Do not scrub or remove the seal.
- Never operate the appliance if the seal is damaged or missing.

⚠ WARNING – Risk of serious harm to health!

The appliance gets very hot when the cleaning function is in progress. The non-stick coating on baking trays and tins is destroyed and noxious gases are released.
- Never clean non-stick baking trays or baking tins using the cleaning function.
- Never clean accessories at the same time.

⚠ WARNING – Risk of harm to health!

The cleaning function heats up the cooking compartment to a very high temperature so that food left over from roasting, grilling and baking will burn off. This process releases vapours, which can irritate mucous membranes.
- Keep the kitchen well ventilated while the cleaning function is running.
- Do not remain in the room for long periods.
- Keep children and pets away.

⚠ WARNING – Risk of burns!

The cooking compartment gets very hot when the cleaning function is in progress.
- Never open the appliance door.
- Allow the appliance to cool down.
- Keep children at a safe distance.

⚠ The outside of the appliance gets very hot when the cleaning function is in progress.
- Never touch the appliance door.
- Allow the appliance to cool down.
- Keep children at a safe distance.

2 Preventing material damage

2.1 General

ATTENTION
Alcoholic vapours may catch fire in the hot cooking compartment and cause permanent damage to the appliance. The appliance door may spring open due to an explosion and it may fall off. The door panels may shatter and fragment. Due to the resulting negative pressure, the cooking compartment may become considerably deformed inwards.
- Do not heat spirits (≥ 15% vol.) when undiluted (e.g. for marinating or pouring over food).

If there is water on the cooking compartment floor when operating the appliance at temperatures above 120 °C, this will damage the enamel.
- Do not use the appliance if there is water on the cooking compartment floor.
- Wipe away any water on the cooking compartment floor before operation.

Objects on the cooking compartment floor at over 50 °C will cause heat to build up. The baking and roasting times will no longer be correct and the enamel will be damaged.
- Do not place any accessories, greaseproof paper or foil of any kind on the cooking compartment floor.
- Only place cookware on the cooking compartment floor if a temperature under 50 °C has been set.

When the cooking compartment is hot, any water inside it will create steam. The change in temperature may cause damage.
- Never pour water into the cooking compartment when it is still hot.
- Never place cookware containing water on the cooking compartment floor.

The prolonged presence of moisture in the cooking compartment leads to corrosion.
- Allow the cooking compartment to dry after use.
- Do not keep moist food in the cooking compartment for a long time with the door closed.
- Do not store food in the cooking compartment.
- Take care not to trap anything in the appliance door.

Fruit juice dripping from the baking tray leaves stains that cannot be removed.
- When baking very juicy fruit flans, do not pack too much on the baking tray.
- If possible, use the deeper universal pan.

Using oven cleaner in a hot cooking compartment damages the enamel.
- Never use oven cleaner in the cooking compartment when it is still warm.
- Remove all food remnants from the cooking compartment and the appliance door before you next heat up the appliance.

If the seal is very dirty, the appliance door will no longer close properly during operation. This may damage the front of adjacent kitchen units.
- Keep the seal clean at all times.
- Never operate the appliance if the seal is damaged or missing.

Sitting or placing objects on the appliance door may damage it.
- Do not place, hang or support objects on the appliance door.
- Do not place cookware or accessories on the appliance door.

With certain models, accessories may scratch the door pane when closing the appliance door.
- Always push accessories fully into the cooking compartment.

If aluminium foil comes into contact with the door pane, it could cause permanent discolouration.
- Do not allow aluminium foil in the cooking compartment to come into contact with the door pane.

3 Environmental protection and saving energy

3.1 Disposing of packaging

The packaging materials are environmentally compatible and can be recycled.
- Sort the individual components by type and dispose of them separately.

3.2 Saving energy

If you follow these instructions, your appliance will use less power.

Only preheat the appliance if the recipe or the recommended settings tell you to do so.
→ *"How it works", Page 31*
- ✔ Not preheating the appliance can reduce the energy used by up to 20%.

Use dark-coloured, black-coated or enamelled baking tins.
- ✔ These types of baking tin absorb the heat particularly well.

Open the appliance door as little as possible during operation.
- ✔ This maintains the temperature in the cooking compartment and eliminates the need for the appliance to reheat.

When baking multiple dishes, do so in succession or in parallel.
- ✔ The cooking compartment is heated after baking the first dish. This reduces the baking time for the subsequent cakes.

For longer cooking times, you can switch the appliance off 10 minutes before the cooking time ends.
- ✔ There is sufficient residual heat to finish cooking the dish.

Remove any accessories that are not being used from the cooking compartment.

- ✔ Accessories that are not being used do not need to be heated.

Allow frozen food to defrost before cooking.
- ✔ This saves the energy that would otherwise be required to defrost it.

Switch off the display in the basic settings.
→ *"Basic settings", Page 16*
- ✔ Energy is saved when the display is switched off.

Note: In accordance with the EU Ecodesign Directive 2023/826, this appliance is in a different state when switched off. This is referred to below as low power mode.
Even when the main function is not active, the appliance needs energy for:
- Detecting operation of the touch keys
- Monitoring door opening
- Editing the time (without display)

By definition, therefore, there is neither an “off” nor a “standby” mode, which is why the term low power mode is used. EN IEC 60350-1:2023 must be used to measure low power mode.

4 Familiarising yourself with your appliance

4.1 Control panel

You can use the control panel to configure all functions of your appliance and to obtain information about the operating status.
On certain models, specific details such as colour and shape may differ from those pictured.

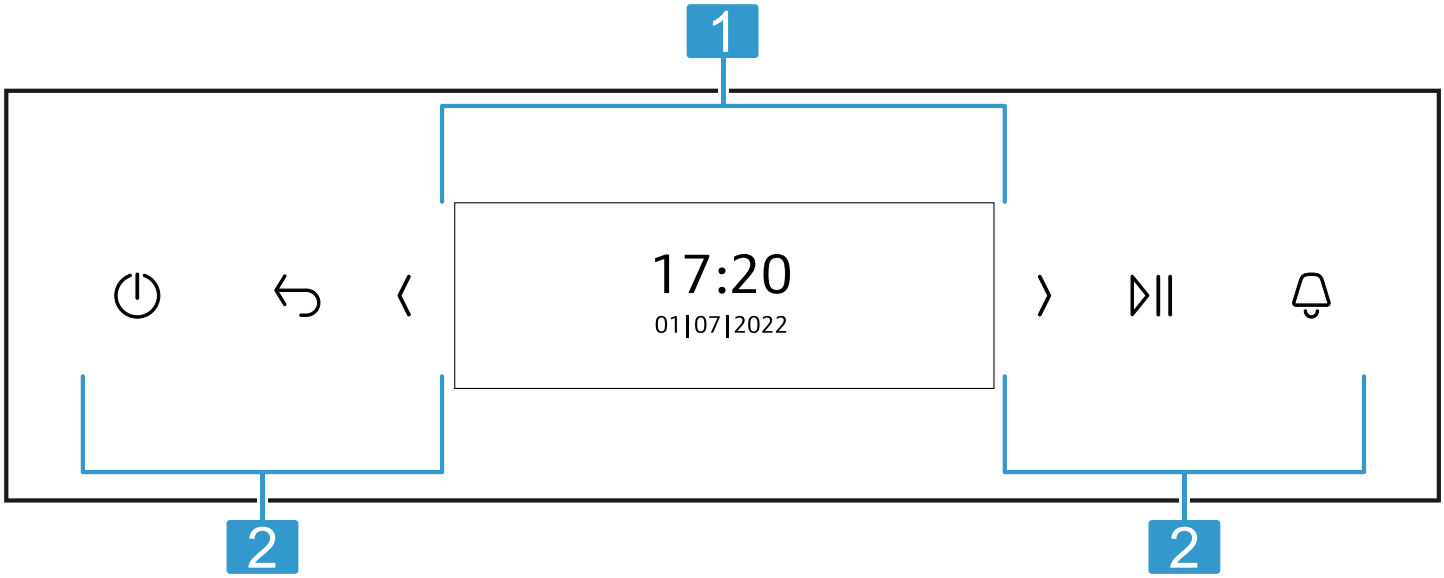

1	Display → *"Display", Page 6*
2	Buttons → *"Buttons", Page 7*

4.2 Display

You can configure all the functions on your appliance via the display.
The main menu provides an overview of your appliance's functions.
→ *"Functions", Page 7*

Navigating

Direction	Use
Navigate to the left	Swipe right on the display with your finger
Navigate to the right	Swipe left on the display with your finger

Setting values

To adjust a setting, touch the appropriate place on the display with your finger. The settings area appears on the display. Swipe left or right over this settings area on the display with your finger until the required setting is magnified.

Values	Use
Increase	Swipe right on the display with your finger
Decrease	Swipe left on the display with your finger

4.3 Buttons

The buttons are touch-sensitive areas. To select a function, press the corresponding button.

Symbol	Name	Use
⏻	On/Off	Switch the appliance on or off
↩	Back	Navigate back
〈	Left arrow	Decreases the adjustment values
〉	Right arrow	Increases the adjustment values
▷||	Start/stop	Start or pause the appliance
🔔	Timer	Set the timer

4.4 Cooking compartment

Various functions in the cooking compartment provide support when operating your appliance.

Shelf supports

The shelf supports in the cooking compartment enable you to place accessories at different heights.
→ *"Accessories", Page 9*
Your appliance has 4 shelf positions. The shelf positions are numbered from bottom to top.
You can remove the shelf supports, e.g. for cleaning.
→ *"Rails", Page 23*

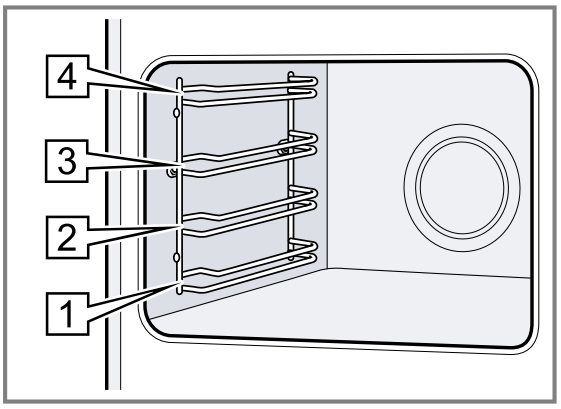

Lighting

One or more oven lights illuminate the cooking compartment.

When you open the appliance door, the light in the cooking compartment switches on. If the appliance door remains open for longer than 15 minutes, the light switches off again.
For most functions, the lighting is switched on during operation. The lighting switches off again when the operation ends.

Cooling fan

The cooling fan switches on and off depending on the appliance's temperature. The hot air escapes above the door.

ATTENTION
Covering the ventilation slots will cause the appliance to overheat.
- Do not cover the ventilation slots.

To cool down the appliance and remove residual moisture from the cooking compartment, the cooling fan runs for a certain time after operation.

Note: You can change the run-on time in the basic settings. If you frequently prepare very moist food or keep it warm in the cooking compartment, set a longer run-on time.
→ *"Basic settings", Page 16*

Appliance door

If you open the appliance door during operation, the operation stops. If you close the appliance door, operation resumes automatically.

5 Functions

The main menu provides an overview of your appliance's functions.

Tip: Depending on the appliance type, additional or more comprehensive functions are available to you with the Home Connect app. You can find more information about this in the app.

Function	Name	Use
	Types of heating	Select the required type of heating and temperature for your food
♡	Favourites	Select saved favourites → *"Favourites", Page 15*
	Dishes	Use programmes or recommended settings for various types of food → *"Dishes", Page 14*

Function	Name	Use
	Cleaning	▪ Pyrolytic self-cleaning cleans the cooking compartment almost by itself → *"Pyrolytic self-cleaning cleaning function", Page 20* ▪ Easy Clean removes light dirt from the cooking compartment → *"Easy Clean cleaning aid", Page 22* ▪ Drying function dries the cooking compartment → *"Drying", Page 22*
	Basic settings	Individually adjust the appliance settings → *"Basic settings", Page 16*

5.1 Heating functions

This is where you will find an overview of the types of heating. You will find recommendations for using the types of heating.
For temperatures above 275 °C, the appliance reduces the temperature to approx. 275 °C after around 40 minutes.

Symbol	Heating function	Temperature	Use
	Circo Therm hot air	30 - 230 °C	Bake or roast on one or more levels. The fan distributes the heat from the ring-shaped heating element in the back wall evenly around the cooking compartment.
	Top/bottom heat	30 - 275 °C	Traditionally bake or roast on one level. This type of heating is especially good for cakes with moist toppings. The heat is emitted evenly from above and below.
	Circo Therm gentle	125 - 230 °C	For gently cooking selected types of food on one level without preheating. The fan distributes the heat from the ring-shaped heating element in the back wall around the cooking compartment. The food is cooked in phases using residual heat. Always keep the appliance door closed when cooking. If you open the appliance door even briefly, the appliance will continue to heat without utilising any residual heat. This type of heating is used to determine the energy consumption in circulating-air mode and the energy efficiency class.
	Top/bottom heat gentle	150 - 250 °C	For gently cooking selected types of food without preheating. Heat is emitted from above and below. This type of heating is used to determine the energy consumption in the conventional mode.
	Air Fry	30 - 275 °C	Cook until crispy, on one level with little fat. Especially suitable for food that is usually fried in oil, e.g. chips. The fan circulates heat from the grill element around the food at high speed. The exhaust air is extracted more intensively from of the cooking compartment.
	Circo-roasting	30 - 275 °C	Roast poultry, whole fish or larger pieces of meat. The grill element and the fan switch on and off alternately. The fan circulates the hot air around the food.
	Circotherm intensive	30 - 275 °C	Cook pizza or food that requires a lot of heat from below. The bottom heating element and the ring-shaped heating element in the back wall heat the cooking compartment.
	Bread baking setting	180 - 275 °C	For baking bread, bread rolls and baked goods that require high temperatures.
	Full-surface grill	50 - 290 °C	For grilling flat items such as steaks, sausages or bread, and for cooking au gratin. The entire area below the grill element becomes hot.
	Centre-area grill	50 - 290 °C	For grilling small amounts of steaks, sausages or bread, and for cooking au gratin. The central area below the grill element becomes hot.
	Bottom heat	30 - 250 °C	For cooking in a bain marie and for baking food for extra time. The heat is emitted from below.
	Low-temperature cooking	70 - 120 °C	For gentle, slow cooking of seared, tender pieces of meat in cookware without a lid.

Symbol	Heating function	Temperature	Use
			The heat is emitted evenly from above and below at a low temperature.
	Dough proving	30 - 50 °C	For proving dough and culturing yoghurt. Dough will prove more quickly than at room temperature. The surface of the dough does not dry out.
	Plate warming	30 - 90 C	For heating cookware.
	Keep warm	50 - 100 °C	For keeping cooked food warm.

5.2 Additional options

You can find an overview of other options here.
To display the options, press ⋮

Symbol	Name	Use
	Lighting	Switch the lighting in the cooking compartment on or off
	Childproof lock	Activate the childproof lock
	Remote start	Activate remote start → *"Home Connect ", Page 17*

5.3 Symbols

You can find an overview of other symbols on the display here.

Symbol	Name	Use
	Save setting	Save the setting
	Close	Close the message
	Reset	Reset the cooking time
	Information	Display information
	Rapid heating	Activate or deactivate the rapid heating function
	Home Connect	▪ Home network and Home Connect server connected ▪ The number of lines shows the signal strength of the home network → *"Home Connect ", Page 17*
	Home network	Home network not connected → *"Home Connect ", Page 17*
	Home Connect server	Home Connect server not connected → *"Home Connect ", Page 17*
	Remote diagnostics	Remote diagnostics activated → *"Home Connect ", Page 17*

6 Accessories

Use original accessories. These have been made especially for your appliance.

Note: Accessories may become deformed if they get hot. Deformation has no effect on function. As the accessory cools down, it will regain its original shape.

The accessories supplied may differ depending on the appliance model.

Accessories		Use
Wire rack	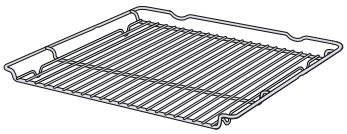	▪ Cake tins ▪ Ovenproof dishes ▪ Cookware ▪ Meat, e.g. roasting joints or steak ▪ Frozen meals

Accessories		Use
Universal pan	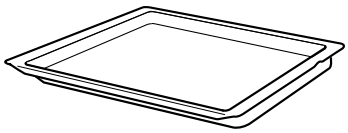	▪ Moist cakes ▪ Baked items ▪ Bread ▪ Large roasts ▪ Frozen meals ▪ Catch dripping liquids, e.g. fat when grilling food on the wire rack.
Air Fry & Grill Tray, enamelled, perforated	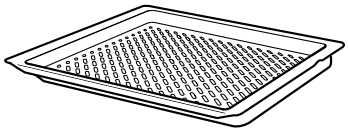	▪ Bake until crispy, for food that is usually fried in oil, e.g. chips. ▪ Grilling food.

6.1 Locking function

The locking function prevents the accessories from tilting when they are pulled out.
You can pull out the accessories approximately halfway without them tipping. The accessories must be inserted into the cooking compartment correctly for the tilt protection to work properly.

6.2 Sliding accessories into the cooking compartment

Always slide the accessory into the cooking compartment the right way round. This is the only way to ensure that accessories can be pulled out approximately halfway without tipping.

1. Turn the accessories so that the notch a is at the rear and is facing downwards.
2. Insert the accessory between the two guide rods for a shelf position.

Wire rack	Insert the wire rack with the open side facing the appliance door. 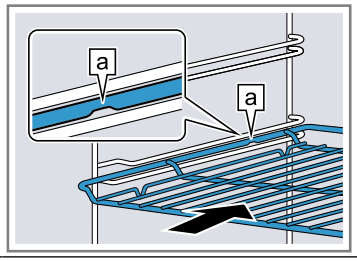
Tray E.g. universal pan or baking tray	Slide the tray in with the sloping edge b towards the appliance door. 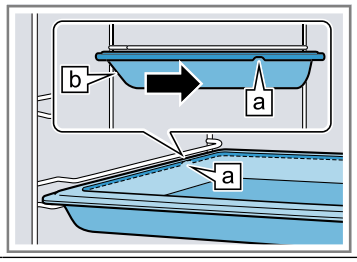

3. Push the accessory all the way in, making sure that it does not touch the appliance door.

Note: Take any accessories that you will not be using out of the cooking compartment while the appliance is in operation.

Combining accessories

You can combine the wire rack with the universal pan to catch any liquid that drips down.

1. Place the wire rack on the universal pan so that both spacers a are on the rear edge of the universal pan.
2. Insert the universal pan between the two guide rods for a shelf position. In so doing, the wire rack is on top of the upper guide rod.

Wire rack on universal pan	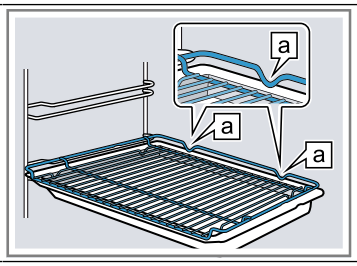

6.3 Other accessories

You can purchase other accessories from our customer service, specialist retailers or online.
You will find a comprehensive range of products for your appliance in our brochures and online:
www.neff-home.com
Accessories are appliance-specific. When purchasing accessories, always quote the exact product number (E no.) of your appliance.
You can find out which accessories are available for your appliance in our online shop or from our customer service.

7 Before using for the first time

Configure the settings for initial start-up. Clean the appliance and accessories.

7.1 Initial use

After connecting the appliance to the power supply, you must configure the settings for its initial start-up. It may

take a few minutes for the settings to appear on the display.

Notes

- You can adjust the settings at any time in the basic settings.
  → *"Basic settings", Page 16*
- You can also use Home Connect to configure the settings. When your appliance is connected, follow the instructions in the app.
  → *"Home Connect ", Page 17*

Setting the language

Requirement: The appliance is connected to the power supply.

1. Press ⏻ to switch the appliance on.
2. Use the 〈 or 〉 button to select the language.
3. Press the required language.
4. Press → to confirm the language.

Setting up Home Connect

Note: You can skip Home Connect set-up by pressing "Later". Next, set the clock.

1. Press "Connect" to set up Home Connect.
2. Make all other settings for initial start-up in the Home Connect app.

Setting the time

1. Use 〈 or 〉 to select the hours.
2. Press the minutes.
3. Use 〈 or 〉 to select the minutes.
4. Press ✓ to confirm the time.

Setting the date

1. Use 〈 or 〉 to select the year.
2. Press the month.
3. Use 〈 or 〉 to select the month.
4. Press the day.
5. Use 〈 or 〉 to select the day.
6. Press ✓ to confirm the date.
7. Press "OK" to end the initial start-up.
8. Open and close the appliance door once.

✔ The appliance will perform a self-test, after which it will be ready to use.

✔ The initial start-up is now complete.

7.2 Cleaning the appliance

Before using the appliance to cook food for the first time, you must clean the cooking compartment and accessories.

1. Remove the product information, accessories and any leftover packaging (e.g. polystyrene pellets) from the cooking compartment.
2. Wipe the smooth surfaces in the cooking compartment with a soft, damp cloth.
3. Press ⏻ to switch the appliance on.
   → *"Switching on the appliance", Page 11*
4. Set the required type of heating and temperature for the heat-up process and press ▷II to start.
   → *"Setting the type of heating and temperature", Page 12*

Heating up	
Type of heating	Circo Therm hot air ⅄
Temperature	Maximum
Cooking time	1 hour

5. Ventilate the kitchen while the appliance is heating.
6. Press ⏻ to switch off the appliance after 1 hour.
   → *"Switching off the appliance", Page 11*
7. Allow the appliance to cool down.
8. Clean the smooth surfaces with soapy water and a dish cloth.
9. Thoroughly clean any accessories you used with soapy water and a dish cloth.

8 Basic operation

8.1 Switching on the appliance

ATTENTION

If there is water on the cooking compartment floor when operating the appliance at temperatures above 120 °C, this will damage the enamel.

- Do not use the appliance if there is water on the cooking compartment floor.
- Wipe away any water on the cooking compartment floor before operation.

- Press ⏻ to switch the appliance on.

Notes

- In the basic settings, you can specify whether the display shows the main menu or another function when the appliance is switched on.
  → *"Basic settings", Page 16*
- If you do not perform any actions on the appliance for an extended period, it will automatically switch itself off.

8.2 Switching off the appliance

- Press ⏻ to switch the appliance off.

Notes

- The residual heat indicator will appear on the display while the cooking compartment is still hot.
  → *"Residual heat indicator", Page 11*
- The cooling fan will continue to run until the cooking compartment has cooled down.
  → *"Cooling fan", Page 7*

8.3 Residual heat indicator

After you have switched off the appliance, the residual heat indicator will appear on the display.

Display	**Temperature**
Residual heat high	Over 120 °C
Residual heat low	Between 60 and 120 °C

8.4 Setting the type of heating and temperature

1. Press ⏻ to switch the appliance on.
2. Press "Types of heating".
3. Scroll through the types of heating using 〈 or 〉.
4. Press the type of heating that you want to use.
5. Press "Temperature".
6. Use 〈 or 〉 to select the temperature.
7. Press ✓ to confirm the setting.
   Also available to select:
   - Cooking time →*Page 13*
   - Ready at →*Page 13*
   - Information →*Page 12*
8. Press ▷II to start the operation.
✔ The cooking time appears on the display.
✔ For some types of heating, the heat-up indicator can be viewed in the preheating phase. The optimal time to place your food in the cooking compartment is as soon as the heat-up indicator is filled.
9. When the food is ready, use ⏻ to switch the appliance off.

8.5 Changing the temperature

You can also change the temperature or level once you have started the appliance.

1. Press "Temperature".
2. Use 〈 or 〉 to change the temperature.
3. Press ✓ to confirm the setting.
✔ The temperature is changed.

8.6 Changing the type of heating

If you switch to a different type of heating, the appliance will reset all the settings.

1. Press ▷II to pause operation.
2. Press to switch to the types of heating.
3. Scroll through the types of heating using 〈 or 〉.
4. Press the type of heating that you want to use.
5. Adjust the temperature or level, if required.
6. Press ▷II to start the operation.

8.7 Extending an operation

If an operation has ended, you can extend the operation or select other settings and restart it.

1. Press "Add extra cooking time".
   ▸ Depending on the operating mode, you can change the settings if required.
2. Press ▷II to start the operation.

8.8 Pausing operation

1. Press ▷II.
2. Press ▷II again to resume operation.

8.9 Displaying information

Note: In most cases, you can call up information about the function that you have just started.

1. Press "Information".
✔ The information will be displayed for a few seconds.
2. Press ✕ to close the information.

8.10 Keeping warm over an extended period

You can use your appliance to keep meals warm for up to 24 hours without changing the behaviour of the appliance. Use the time functions and change the basic settings.

Note: If you open the appliance door during operation, the appliance stops heating. When you close the appliance door, the appliance continues to heat again. To ensure that the behaviour of the appliance is not changed during operation, only open the appliance door once the set time has elapsed.

1. Change the basic settings.
   → *"Basic settings", Page 16*
   ▸ Change the "Lighting" basic setting to "Always off".
   ▸ Change the "Clock display" basic setting to "On".
   ▸ Change the "Signal tone" basic setting to "Very short duration".
✔ This will ensure that the light in the cooking compartment is always off while the appliance is in operation and when you open the appliance door. The clock display does not change. The duration of the signal tone is reduced at the end of the operation.
2. Set the required operating mode.
   → *"Heating functions", Page 8*
3. Set the required cooking time depending on the operating mode.
   → *"Setting the cooking time", Page 13*
   → *"Time-setting options", Page 12*
4. Use "End" to set the time at which the operation should end.
   → *"Setting the "Ready at" time for delayed starts", Page 13*
   → *"Time-setting options", Page 12*
5. Place the food in the cooking compartment before the appliance starts to heat.
6. Press ▷II to start the operation.
✔ The display shows the time remaining until the operation starts.
✔ Once the start time has been reached, the appliance starts heating and the cooking time starts counting down.
7. When the operation has ended, remove the food from the cooking compartment. The appliance automatically switches off completely after approximately 15 to 20 minutes.
   Note: If required, change the different basic settings again.

9 Time-setting options

Your appliance has different time-setting options, with which you can control its operation.

Time-setting option	Use
Timer 🔔	You can set the timer to run independently of the appliance during operation. The timer does not affect the appliance.
Cooking time ⊢⊣	Once the set duration has elapsed, the appliance stops heating automatically.
Ready at ⊣	Along with the duration, you can set the time at which you want the operation to end. The appliance starts up automatically so that the operation finishes at the required time.

9.1 Timer

You can set the timer regardless of whether the appliance is on or off.

Setting the timer

1. Press 🔔.
2. Press Hours, Minutes or Seconds.
3. Use 〈 or 〉 to select the timer duration.
4. Press ▷ to confirm the setting.
✔ 🔔 lights up red. The timer counts down.
✔ Once the timer duration has elapsed, an audible signal sounds.
5. Press any button to end the audible signal.

Changing the timer

1. Press 🔔.
2. Press ||.
3. Press Hours, Minutes or Seconds.
4. Use 〈 or 〉 to change the timer duration.
5. Press ▷ to confirm the setting.

Cancelling the timer

1. Press 🔔.
2. Press ⟲ to reset the timer duration.
3. Press ↩ to close the timer.

9.2 Cooking time

Once the set duration has elapsed, the appliance stops heating automatically. You can only use the cooking time in conjunction with a type of heating.

Setting the cooking time

1. Set a type of heating and a temperature.
2. Press "Cooking time".
3. Press Hours or Minutes.
4. Use 〈 or 〉 to select the cooking time.
5. Press ✓ to confirm the setting.
6. Press ▷|| to start operation with a cooking time.
✔ The cooking time appears on the display. The cooking time counts down.
✔ When the time has elapsed, a signal sounds.
7. Press any button to end the audible signal.

Changing the cooking time

1. Press ⌒.
2. Press "Cooking time".
3. Use 〈 or 〉 to change the cooking time.
4. Press ✓ to confirm the setting.

Cancelling the cooking time

1. Press ⌒.
2. Press "Cooking time".
3. Reset the cooking time using ⟲.
4. Press ✓ to confirm the setting.

9.3 Delayed start/"Ready at" time

With this function, the appliance automatically switches itself on, and then switches itself off at the preselected end time. To enable it to do this, you set the cooking time (duration) and specify when you want your food to be ready. You can only use the delayed start function in conjunction with a heating function.

Setting the "Ready at" time for delayed starts

Notes

- Do not leave food that spoils easily in the cooking compartment for too long.
- You cannot use the delayed start function with every type of heating.

1. Place the food into the cooking compartment and close the appliance door.
2. Set a type of heating and a temperature.
3. Press "Cooking time".
4. Press Hours or Minutes.
5. Use 〈 or 〉 to select the duration.
6. Press ✓ to confirm the setting.
7. Press "Ready at".
✔ The time at which your food will be ready will appear on the display.
8. Use the 〉 button to select the required end time.
9. Press ✓ to confirm the setting.
10. Press ▷|| to confirm the delayed start.
✔ Once the start time has been reached, the appliance starts heating and the cooking time starts counting down.
✔ When the time has elapsed, a signal tone sounds.
11. Press any button to end the audible signal.

Changing the "Ready at" time for delayed starts

1. Press ▷||.
2. Press "Ready at".
3. Use 〈 or 〉 to change the end time.
4. Press ✓ to confirm the setting.
5. Press ▷|| to confirm the delayed start.

Cancelling the "Ready at" time for delayed starts

1. Press ▷||.
2. Press "Ready at".
3. Use ⟲ to reset the end time.
4. Press ✓ to confirm the setting.
✔ The end time corresponds to the current time plus the set cooking time.
✔ Press ▷|| to start operation with a cooking time.

Note: If you want to continue the operation without a cooking time, cancel the cooking time.
→ *"Cancelling the cooking time", Page 13*

10 Dishes

"Dishes" helps you to use your appliance to prepare different dishes by selecting the optimum settings automatically.

10.1 Cookware for dishes

The cooking result depends on the composition of the meat and the size of cookware.
You should therefore use heat-resistant cookware that is suitable for temperatures up to 300 °C. Glass or glass ceramic cookware is best. The joint should cover approx. 2/3 of the cookware base.

Cookware made from the following material is not suitable:
- Bright, shiny aluminium
- Unglazed clay
- Plastic or plastic handles

10.2 Setting options for the dishes

To cook the dishes perfectly, the appliance uses different settings depending on the dish.
The display shows you the settings that are used. You can adjust certain settings. Follow the instructions on the display.

Note: The cooking result depends on the quality and composition of the food. Use fresh and, ideally, chilled food. Use frozen food straight from the freezer.

Tips and information about the settings

If you set a dish, the display shows relevant information for this dish, e.g.:
- Suitable shelf position
- Suitable accessory or cookware
- Added liquid
- Time for turning or stirring
  When this time is reached, a signal sounds.

To call up the information, press "Information". Some notifications are displayed automatically.

Programmes

The optimum type of heating, temperature and cooking time are preset for programmes.
To achieve an optimal cooking result, you must also set the weight, thickness or the cooking level. You can set the weight only in the intended range.
Unless otherwise indicated, set the total weight for your dish.

Recommended settings

For the recommended settings, the optimum type of heating is preset as a fixed value. You can adjust the set temperature and the cooking time.

10.3 Overview of the dishes

You can see which individual dishes are available to you here. The dishes depend on the features of your appliance.

Note: In the basic settings, you can regionally specialise the displayed dishes.
→ *"Basic settings", Page 16*

Dishes
- Pavlova
- Muffins
- Scones
- Part-cooked bread rolls or baguette
- Bake, savoury, fresh, cooked ingredients
- Potato gratin, raw ingredients, 4 cm deep
- Lasagne, fresh
- Fruit crumble
- Chicken, halved
- Chicken pieces
- Duck, unstuffed
- Goose legs
- Small turkey, unstuffed
- Turkey breast
- Turkey, crown - British style
- Boned pork neck joint
- Joint of pork with crackling, e.g. shoulder
- Pork tenderloin steak
- Pork loin joint - British style
- Pork roast joint - British style
- Pork belly - British style
- Sirloin, rare
- Sirloin, medium
- Pot-roasted beef
- Beef slow roast joint - British style
- Beef top side, top rump - British style
- Joint of veal, marbled
- Joint of veal, lean
- Leg of lamb on the bone, well done
- Boned leg of lamb, medium
- Lamb shoulder, boned and rolled - British style
- Meat loaf made from fresh mince
- Veal Ossobuco
- Meat stew
- Roast fish, whole
- Pizza, frozen, with thin base, x 1
- Pizza, frozen, with deep-pan base, x 1
- Chips, frozen
- Baked potatoes, whole
- Stew with vegetables

10.4 Setting a dish

1. Press "Dishes".
2. Press the required dish.
   Note: The setting options vary depending on the dish.
   → *"Setting options for the dishes", Page 14*
   ✔ The settings for the dish appear on the display.
3. Adjust the settings if required.
   The setting options vary depending on the dish.
   → *"Setting options for the dishes", Page 14*
4. For information about the accessory and shelf position, for example, press "Information".
5. Press ▷II to start the operation.
   ✔ The appliance starts to heat and the cooking time counts down.
   ✔ Once the dish is ready, a signal sounds. The appliance stops heating.
6. Decide how you want to continue:

Finish	Dish is ready

Add extra cooking time	→ *"Extending the cooking time", Page 15*
Keep warm	→ *"Keeping a dish warm", Page 15*

10.5 Extending the cooking time

1. To extend the cooking time, press "Add extra cooking time".
2. Use the 〈 or 〉 button to change the settings, if required.
3. Press ✓ to confirm the settings.

10.6 Keeping a dish warm

1. To keep the dish warm, press "Keep warm".
2. Use the 〈 or 〉 button to change the settings, if required.
3. Press ✓ to confirm the settings.
4. Press ▷II to start the keep warm function.

11 Favourites

In the "Favourites", you can save your settings and use these again.

Notes

- Depending on the appliance type/software status, you must first download this function to your appliance. You can find more information in the Home Connect app.
- You can start the favourites on the appliance or using the Home Connect app. All other functions are available via the Home Connect app.

11.1 Saving favourites

You can save up to 10 different functions as your favourites.

- To save a function as a favourite, you must use the Home Connect app. When your appliance is connected, follow the instructions in the app.

11.2 Selecting favourites

If you have saved favourites, you can use these to set the operation.

1. Press "Favourites".
2. Press the required favourites.
3. If required, you can change the settings.
4. Press ▷II to start the operation.

11.3 Changing favourites

You can change, sort or delete your saved favourites at any time.

- To change the favourites, you must use the Home Connect app. When your appliance is connected, follow the instructions in the app.

12 Childproof lock

You can secure your appliance to prevent children from accidentally switching it on or changing the settings.

12.1 Activating the childproof lock

The childproof lock disables the control panel to prevent children from accidentally switching on the appliance. To switch on the appliance, deactivate the childproof lock.

Notes

- When you activate the childproof lock, the appliance will immediately disable the control panel. The ⏻ button is the exception and will not be disabled.
- You can also activate the appliance door lock. → *"Basic settings", Page 16*

1. Press ⋮.
2. Press ⚿.

✔ "Childproof lock activated" appears on the display.

12.2 Deactivating the childproof lock

- Press and hold "Unlock" until "Childproof lock deactivated" appears.

13 Rapid heating

With the rapid heating function, you can shorten the heat-up time.
From 200 °C, the rapid heating function is activated automatically.

Note: You can deactivate automatic rapid heating from 200 °C in the basic settings.
→ *"Basic settings", Page 16*

Rapid heating is possible for the following types of heating:

- "Circo Therm hot air" ⅄
- "Top/bottom heat" ≡
- "Bread baking setting" ▭

13.1 Activating rapid heat-up

To ensure an even cooking result, do not place the food in the cooking compartment until rapid heating has come to an end.

Note: Do not set a cooking time until rapid heating has come to an end.

1. Set a suitable type of heating and a temperature of at least 100 °C.
   Rapid heating automatically switches on at temperatures of 200 °C and above.
2. Press .
3. Press ▷II to start the operation.
✔ Once rapid heating has ended, "Rapid heating" switches off automatically and a signal sounds. goes out on the display.
4. Place the food in the cooking compartment.

13.2 Deactivating the "Rapid heat-up" function

1. Press ⌃.
2. Press .

14 Basic settings

You can configure the basic settings for your appliance to meet your needs.

14.1 Overview of the basic settings

Here you can find an overview of the basic settings and factory settings. The basic settings depend on the features of your appliance.
You can find more information about the individual basic settings on the display using "Information".

Basic settings	Selection
Language	See selection on appliance
Home Connect	Connect the oven to a mobile end device and remotely control it
Clock	Time in 24-hour format
Date	Date in the format DD.MM.YYYY

Display	Selection
Brightness	▪ 1 ▪ 2 ▪ 3 ▪ 4 ▪ 5 [1]
Clock display	▪ On for a limited time ▪ On (this setting increases energy consumption) ▪ Off [1]
Clock type	▪ Digital + date [1] ▪ Digital ▪ Analogue + date ▪ Analogue
Alignment	Align the display horizontally and vertically

Tone	Selection
Button tone	▪ On [1] ▪ Off
Signal tone	▪ Very short duration ▪ Short duration ▪ Medium duration [1] ▪ Long duration

Appliance settings	Selection
Fan run-on time	▪ Minimum ▪ Recommended [1] ▪ Long ▪ Very long
Pull-out system	▪ Retrofitted (if 2 or 3 sets of pull-out rails are fitted) ▪ Not retrofitted (if shelf supports and a single set of pull-out rails are fitted) [1]
Lighting	▪ On when cooking and opening the door [1] ▪ Only when the door is opened ▪ Always off

Personalisation	Selection
Brand logo	▪ Display [1] ▪ Do not display
Operation after switch-on	▪ Main menu [1] ▪ Types of heating ▪ Dishes ▪ Favourites
Elapsed cooking time	▪ Display [1] ▪ Do not display
Regional dishes	▪ All [1] ▪ European dishes ▪ British dishes
Dishes	▪ All [1] ▪ No pork ▪ Kosher only
Childproof lock	▪ Keylock only [1] ▪ Door lock + keylock ▪ Deactivated
Automatic rapid heating	▪ On [1] ▪ Off

Factory settings	Selection
Factory settings	▪ Cancel ▪ Restore

[1] Factory setting (may vary according to model)

Appliance information	Display
Appliance information	Display technical information about the appliance

14.2 Changing basic settings

1. Press ⏻ to switch the appliance on.
2. Press "Basic settings".
3. Use 〈 or 〉 to scroll through the basic settings or categories.
4. Press the required basic setting or category.
   ▸ Press the required basic setting in a category.
5. Swipe left or right to select the required setting.
6. Press ✓ to confirm the change.
   If ✓ does not appear, the change is applied immediately.
7. To change other basic settings, use to return to the basic settings.

15 Home Connect

This appliance is network-capable. Connecting your appliance to a mobile device lets you control its functions via the Home Connect app, adjust its basic settings and monitor its operating status.
The Home Connect services are not available in every country. The availability of the Home Connect function depends on the availability of the Home Connect services in your country. You can find information about this at: *www.home-connect.com*.
The Home Connect app guides you through the entire login process. Follow the instructions, noting the information in the Home Connect app.

Notes

- Please note the safety precautions in this instruction manual and make sure that they are also observed when operating the appliance via the Home Connect app.
  → *"Safety", Page 2*
- Operating the appliance on the appliance itself always takes priority. During this time it is not possible to operate the appliance using the Home Connect app.
- In networked standby mode, the appliance requires a maximum of 2 W.

15.1 Setting up Home Connect

Requirements

- The appliance is connected to the power supply and is switched on.
- You have a mobile device with a current version of the iOS or Android operating system, e.g. a smartphone.
- The appliance is receiving signals from the WLAN home network (Wi-Fi) at its installation location.
- The mobile device and the appliance are within range of your home network's Wi-Fi signal.

1. Scan the following QR code.

   You can install the Home Connect app and connect your appliance via the QR code.
2. Follow the instructions in the Home Connect app.

15.2 Home Connect settings

You can adjust the Home Connect settings and network settings in your appliance's basic settings.
Which settings the display shows will depend on whether Home Connect has been set up and whether the appliance is connected to your home network.

Basic setting	Possible settings	Explanation
Home Connect assistant	Start the assistant Disconnect	You can connect your appliance to the Home Connect app via the Home Connect assistant. **Note:** If you are using the Home Connect assistant for the first time, only the "Start assistant" setting is available.
Wi-Fi	On Off	You can use the Wi-Fi to switch off the network connection for your appliance. When you have connected successfully once, you can deactivate the Wi-Fi and not lose your detailed data. As soon as you activate Wi-Fi again, the appliance connects automatically. **Note:** In networked standby mode, the appliance requires a maximum of 2 W.
Remote control status	Monitoring Manual remote start Permanent remote start	During monitoring, you can only view the operating status of the appliance in the app.

Basic setting	Possible settings	Explanation
		If you convert from monitoring or permanent remote start to manual remote start, you must activate the remote start each time. You can open the appliance door within 15 minutes of having activated remote start. Remote start will not be deactivated by this. Once 15 minutes have elapsed, opening the appliance door will deactivate manual remote start. For permanent remote start, you can start and operate the appliance remotely at any time. If you often operate the appliance remotely, it is helpful to set the remote start to "Permanent".

15.3 Operating the appliance with the Home Connect app

You can use the Home Connect app to set and start the appliance remotely.

⚠ **WARNING – Risk of fire!**
Combustible objects that are left in the cooking compartment may catch fire.
- Never store combustible objects in the cooking compartment.
- If smoke is emitted, the appliance must be switched off or the plug must be pulled out and the door must be held closed in order to stifle any flames.

Requirements
- The appliance is switched off.
- The appliance is connected to the home network and to the Home Connect app.
- In order to be able to set the appliance via the app, the manual or permanent remote start must be selected in the "Remote control status" basic setting.

1. To activate manual remote start, press ☞.
   You only have to confirm on the oven if you are switching from monitoring or permanent remote start to manual remote start.
   With permanent remote start, you do not need to confirm on the oven.
2. Configure a setting in the Home Connect app and send it to the appliance.

   Notes
   - When you start the oven using the controls on the appliance itself, the remote start function is activated automatically. You can use the Home Connect app to adjust the settings or start a new programme.
   - You can open the appliance door within 15 minutes of having activated remote start. Remote start will not be deactivated by this. Once 15 minutes have elapsed, opening the appliance door will deactivate manual remote start.

15.4 Software update

Your appliance's software can be updated using the software update function, e.g. for the purposes of optimisation, troubleshooting or security updates. This may lead to minor changes of visualizations and operation in the display.
To do this, you must be a registered Home Connect user, have installed the app on your mobile device and be connected to the Home Connect server.
As soon as a software update is available, you will be informed via the Home Connect app and will be able to start the software update via the app. Once the update has been successfully downloaded, you can start installing it via the Home Connect app if you are in your home network (Wi-Fi). The Home Connect app informs you once installation is successful.
You can find the current software version in the Home Connect app under the appliance information for the appliance.

Notes
- The software update consists of two steps.
  - The first step is the download.
  - The second step is the installation on your appliance.
- You can continue to use your appliance as normal while updates are downloading. Depending on your personal settings in the app, software updates can also be set to download automatically.
- Installation takes a few minutes. You cannot use your appliance during installation.
- We recommend that you install security updates as soon as possible.

15.5 Remote diagnostics

Customer Service can use Remote Diagnostics to access your appliance if you contact them, have your appliance connected to the Home Connect server and if Remote Diagnostics is available in the country in which you are using the appliance.

Tip: For further information and details about the availability of Remote Diagnostics in your country, please visit the service/support section of your local website: *www.home-connect.com*.

15.6 Data protection

Please see the information on data protection.

The first time your appliance is registered on a home network connected to the Internet, your appliance will transmit the following types of data to the Home Connect server (initial registration):
- Unique appliance identification (consisting of appliance codes as well as the MAC address of the installed Wi-Fi communication module).
- Security certificate of the Wi-Fi communication module (to ensure a secure data connection).
- The current software and hardware version of your appliance.
- Status of any previous resetting to factory settings.

This initial registration prepares the Home Connect functions for use and is only required when you want to use the Home Connect functions for the first time.

Note: Please note that the Home Connect functions can only be utilised with the Home Connect app. Information

on data protection can be retrieved in the Home Connect app.

16 Cleaning and servicing

To keep your appliance working efficiently for a long time, it is important to clean and maintain it carefully.

16.1 Cleaning products

In order to avoid damaging the various oven surfaces on the appliance, do not use unsuitable cleaning products.

⚠ **WARNING – Risk of electric shock!**
An ingress of moisture can cause an electric shock.
- Do not use steam- or high-pressure cleaners to clean the appliance.

ATTENTION
Unsuitable cleaning agents damage the surfaces of the appliance.
- Do not use harsh or abrasive cleaning products.
- Do not use cleaning products with a high alcohol content.
- Do not use hard scouring pads or cleaning sponges.
- Do not use any special cleaners for cleaning the appliance while it is hot.

Using oven cleaner in a hot cooking compartment damages the enamel.
- Never use oven cleaner in the cooking compartment when it is still warm.
- Remove all food remnants from the cooking compartment and the appliance door before you next heat up the appliance.

If different cleaning agents are mixed together, there may be a chemical reaction between these.
- Do not mix cleaning agents.
- Completely remove any cleaning agent residue.

Salt contained in new sponge cloths may damage surfaces.
- Wash new sponge cloths thoroughly before use.

Suitable cleaning agents

Only use cleaning agents that are suitable for the different surfaces on your appliance.
Follow the instructions on cleaning the appliance.
→ *"Cleaning the appliance", Page 20*

Appliance front

Surface	Suitable cleaning agents	Information
Stainless steel	▪ Hot soapy water ▪ Special stainless steel cleaning products suitable for hot surfaces	To prevent corrosion, remove any patches of limescale, grease, starch or albumin (e.g. egg white) from stainless steel surfaces immediately. Apply a thin layer of the stainless steel cleaning product.
Plastic or painted surfaces	▪ Hot soapy water	Do not use glass cleaner or a glass scraper. To avoid permanent stains, immediately remove any descaling agent that gets onto the surface.
Glass	▪ Hot soapy water	Do not use glass cleaner or a glass scraper.

Appliance door

Range	Suitable cleaning agents	Information
Door panels	▪ Hot soapy water ▪ Oven cleaner ▪ stainless steel scourer	Do not use a glass scraper. **Tip:** Remove the door panels in order to clean them thoroughly. → *"Appliance door", Page 23*
Door cover	▪ Made of stainless steel: Stainless steel cleaner ▪ Made from plastic: Hot soapy water	Do not use glass cleaner or a glass scraper. Do not use stainless steel care products. **Tip:** Remove the door cover for thorough cleaning. → *"Appliance door", Page 23*
Stainless steel interior door frame	▪ Stainless steel cleaner	Discolouration can be removed using stainless steel cleaner. Do not use stainless steel care products.
Door handle	▪ Hot soapy water	To avoid permanent stains, immediately remove any descaling agent that gets onto the surface.

Cooking compartment

Range	Suitable cleaning agents	Information
Enamel surfaces	▪ Hot soapy water ▪ Vinegar solution ▪ Oven cleaner ▪ stainless steel scourer	Soak any heavily soiled areas and use a brush or stainless steel scourer. Leave the appliance door open to dry the cooking compartment after cleaning it. **Notes** ▪ It is best to use the cleaning function. → *"Pyrolytic self-cleaning cleaning function", Page 20* ▪ Enamel burns at very high temperatures, causing minor discolouration. The functionality of your appliance is not affected by this. ▪ The edges of thin trays cannot be completely enamelled and may be rough. This does not impair the corrosion protection. ▪ Food residues leave a white coating on the enamel surfaces. The coating does not pose a health risk. The functionality of your appliance is not affected by this. You can remove residues with lemon juice.
Shelf supports	▪ Hot soapy water ▪ stainless steel scourer	Soak any heavily soiled areas and use a brush or stainless steel scourer. **Note:** To clean thoroughly, detach the shelf supports. → *"Rails", Page 23*
Accessories	▪ Hot soapy water ▪ Oven cleaner ▪ stainless steel scourer	Soak any heavily soiled areas and use a brush or stainless steel scourer. Enamelled accessories are dishwasher-safe.

16.2 Cleaning the appliance

In order to avoid damaging the appliance, you must clean your appliance only as specified, and with suitable cleaning products.

⚠ **WARNING – Risk of burns!**
The appliance and its parts that can be touched become hot during use.
- ▸ Caution should be exercised here in order to avoid touching heating elements.
- ▸ Young children under 8 years of age must be kept away from the appliance.

⚠ **WARNING – Risk of fire!**
Loose food remnants, fat and meat juices may catch fire.
- ▸ Before using the appliance, remove the worst of the food residues and remnants from the cooking compartment, heating elements and accessories.

Requirement: Read the information on cleaning products.
→ *"Cleaning products", Page 19*

1. Clean the appliance using hot soapy water and a dish cloth.
   - ▸ For some surfaces, you can use alternative cleaning agents.
     → *"Suitable cleaning agents", Page 19*
2. Dry with a soft cloth.

17 "Pyrolytic self-cleaning" cleaning function

With the "Pyrolytic self-cleaning" cleaning function, the cooking compartment is cleaned virtually automatically. The cleaning function requires approx. 3.9 - 4.8 kilowatt hours.

17.1 Preparing the appliance for the cleaning function

To achieve a good cleaning result and prevent damage, prepare the appliance carefully.

⚠ **WARNING – Risk of fire!**
Combustible objects that are left in the cooking compartment may catch fire.
- ▸ Never store combustible objects in the cooking compartment.
- ▸ If smoke is emitted, the appliance must be switched off or the plug must be pulled out and the door must be held closed in order to stifle any flames.

Loose food remnants, fat and meat juices may catch fire when the cleaning function is in progress.
- ▸ Before you start the cleaning function, always remove coarse dirt from the cooking compartment.
- ▸ Never clean accessories at the same time.

The outside of the appliance gets very hot when the cleaning function is in progress.
- ▸ Never hang combustible objects, e.g. tea towels, on the door handle.
- ▸ Leave the front of the appliance clear.
- ▸ Keep children at a safe distance.

If the door seal is damaged, a large amount of heat is generated around the door.
- ▸ Do not scrub or remove the seal.

- Never operate the appliance if the seal is damaged or missing.

1. Remove accessories and cookware from the cooking compartment.
   You can also clean the shelf supports.
   Tip: Also remove the shelf supports to save energy and achieve a better cleaning result in the cooking compartment.
   → *"Rails", Page 23*
2. Remove coarse dirt from the cooking compartment and from the shelf supports.
   Coarse dirt may burn on, making it difficult to remove.
3. Use a detergent solution and a soft cloth to clean the surfaces at the edges of the cooking compartment around the door seal.
   Do not remove or scrub the door seal.
   Use oven cleaner to remove stubborn dirt from the inner door pane.
4. Remove any objects from the cooking compartment.
   The cooking compartment must be empty except for the shelf supports.

17.2 Setting the "Pyrolytic self-cleaning" cleaning function

⚠ **WARNING – Risk of harm to health!**
The cleaning function heats up the cooking compartment to a very high temperature so that food left over from roasting, grilling and baking will burn off. This process releases vapours, which can irritate mucous membranes.
- Keep the kitchen well ventilated while the cleaning function is running.
- Do not remain in the room for long periods.
- Keep children and pets away.

⚠ **WARNING – Risk of burns!**
The cooking compartment gets very hot when the cleaning function is in progress.
- Never open the appliance door.
- Allow the appliance to cool down.
- Keep children at a safe distance.

⚠ The outside of the appliance gets very hot when the cleaning function is in progress.
- Never touch the appliance door.
- Allow the appliance to cool down.
- Keep children at a safe distance.

Note: The oven light does not light up while the cleaning function is running.

Requirement:

→ *"Preparing the appliance for the cleaning function", Page 20*

1. Press "Cleaning".
2. Press "Pyrolytic self-cleaning" ⁝⁝⁝.
3. Press "Level" to set the cleaning setting.

Cleaning setting	Cleaning level	Duration in hours
1	Low	Approx. 2:15
2	High	Approx. 2:30

Select the higher cleaning setting if the cooking compartment is particularly dirty or has not been cleaned for a while.
You cannot change the duration of the cleaning function.
Once the cleaning function is in progress, you cannot change the cleaning setting.
✔ The duration of the cleaning setting will appear on the display.
4. Press ▷II to start the cleaning function.
✔ A notification stating that you should carry out the necessary preparatory work for the cleaning function appears on the display.
5. Press "OK" to confirm the notification.
✔ The cleaning function starts. The duration counts down on the display.
✔ For your safety, the appliance door locks the cooking compartment. 🔒 appears on the display.
✔ Once the cleaning function has run through to the end, an audible signal sounds.
6. After using the cleaning function, prepare the appliance for operation.
   → *"Preparing the appliance after the cleaning function", Page 21*
   The appliance door will remain locked until the appliance has cooled down sufficiently and 🔒 has gone out.

17.3 Cancelling the cleaning function

Note: You can no longer stop or change the cleaning function once it has started.
- To cancel the cleaning function, press ⏻ to switch the appliance off.

17.4 Preparing the appliance after the cleaning function

1. Allow the appliance to cool down.
2. Wipe off any ash that has been left behind in the cooking compartment, on the shelf supports and around the appliance door.
   → *"Cleaning and servicing", Page 19*
3. Remove white residues with lemon juice.
   Note: White residues on the enamel surfaces may be caused by heavy soiling. These food residues are harmless. The deposits do not compromise the functionality of the appliance.

Note: While the cleaning function is running, the frame on the inside of the appliance door or other parts of the door that are made of stainless steel become discoloured. This discolouration does not compromise the functionality of the appliance. The discolouration can be removed using a stainless steel cleaner.

18 "Easy Clean" cleaning aid

Use the "Easy Clean" cleaning aid for intermediate cleaning of the cooking compartment. The "Easy Clean" cleaning aid softens dirt by vaporising the soapy water. It is then easier to remove the dirt.

18.1 Setting the "Easy Clean" cleaning aid

⚠ **WARNING – Risk of scalding!**
If there is water in the cooking compartment when it is hot, this may create hot steam.
- Never pour water into the cooking compartment when the cooking compartment is hot.

Notes
- The oven light does not light up while the cleaning aid is running.
- Do not open the appliance door while the appliance is in operation.

Requirements
- You can only start the cleaning aid once the cooking compartment is cold (room temperature) and the appliance door is closed.
- To remove particularly stubborn dirt, rub washing-up liquid onto dirty areas on the smooth surfaces before starting the cleaning aid.

1. Remove any accessories from the cooking compartment.
2. **ATTENTION –** Distilled water in the cooking compartment leads to corrosion.
   - Do not use distilled water.

   Mix 0.4 litres water with a drop of washing-up liquid and pour into the centre of the cooking compartment floor.
3. Press "Cleaning".
4. Press "Easy Clean".
5. Press ▷II to start the cleaning aid.
   ✔ A notification stating that you should carry out the necessary preparatory work for the cleaning aid appears on the display.
6. Press "OK" to confirm the notification.
   ✔ The cleaning aid starts. The duration counts down on the display.
   ✔ Once the cleaning aid has run through to the end, an audible signal sounds.
7. Press any button to end the audible signal.
8. After using the cleaning aid, finish cleaning the cooking compartment.
   → *"Wiping down the cooking compartment", Page 22*

18.2 Wiping down the cooking compartment

ATTENTION
The prolonged presence of moisture in the cooking compartment leads to corrosion.
- After using the cleaning aid, wipe the cooking compartment clean and allow it to dry fully.

Requirement: The cooking compartment must have cooled down.
1. Open the appliance door and remove the remaining water with an absorbent sponge cloth.
2. Clean the smooth surfaces in the cooking compartment with a dish cloth or a soft brush. Remove stubborn food remnants using a stainless steel scouring pad.
3. Remove limescale with a cloth soaked in vinegar. Then wipe with clean water and rub dry with a soft cloth (including under the door seal).
4. If there is any stubborn dirt that you are unable to remove, run the cleaning aid again once the cooking compartment has cooled down.
5. In order to dry the cooking compartment, leave the appliance door open for around 1 hour or use the drying function.
   → *"Drying", Page 22*

19 Drying

19.1 Drying the cooking compartment

⚠ **WARNING – Risk of burns!**
The appliance becomes hot during operation.
- Allow the appliance to cool down before cleaning.

ATTENTION
If there is water on the cooking compartment floor when operating the appliance at temperatures above 120 °C, this will damage the enamel.
- Do not use the appliance if there is water on the cooking compartment floor.
- Wipe away any water on the cooking compartment floor before operation.

Requirement: The cooking compartment has cooled down.
1. Remove any food remnants from the cooking compartment.
2. Dry the cooking compartment with a sponge.
3. Remove limescale marks with a cloth soaked in vinegar, then wipe with clean water and dry with a soft cloth.
4. Leave the cooking compartment to dry with the appliance door open for 1 hour or use "Drying function".
   → *"Setting Drying function", Page 22*

19.2 Setting "Drying function"

Requirement:
→ *"Drying the cooking compartment", Page 22*
1. Press "Cleaning".
2. Press "Drying function".
   ✔ The duration appears on the display. You cannot change the duration of the drying function.

3. Start the drying function using ▷II.
✔ A notification stating that you should carry out the necessary preparatory work for the drying function appears on the display.
4. Press "OK" to confirm the notification.
✔ The drying function starts. The duration counts down on the display.
✔ Once the drying function has run through to the end, an audible signal sounds.
5. Leave the appliance door open for 1-2 minutes so that the cooking compartment dries completely.

20 Rails

To thoroughly clean the rails and the cooking compartment, or to replace the rails, you can remove the rails.

20.1 Detaching the rails

⚠ **WARNING – Risk of burns!**
The shelf supports get very hot
- Never touch the shelf supports when hot.
- Always allow the appliance to cool down.
- Keep children at a safe distance.

1. Lift the rail forwards slightly ① and detach it ②.
2. Pull the whole rail to the front ③ and remove it.

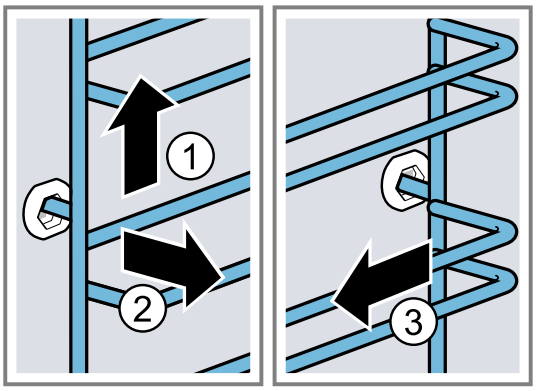

3. Clean the rail.
→ *"Cleaning products", Page 19*

20.2 Attaching the rails

Notes
- The rails only fit on the right or left.
- For both rails, ensure that the curved rods are at the front.

1. First, push the rail into the middle of the rear socket ① until the rail rests against the cooking compartment wall, and then push this back ②.
2. Push the rail into the front socket ③ until the rail also rests against the cooking compartment wall, and then press this downwards ④.

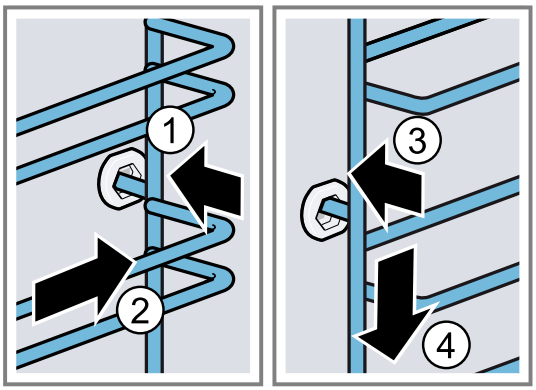

21 Appliance door

To clean the appliance door thoroughly, you can disassemble the appliance door.

⚠ **WARNING – Risk of injury!**
If the hinges are not secured due to an incomplete lock, they can snap shut with great force.
- To detach or attach the appliance door, always turn the two locks as far as they will go.
- If the hinge snaps closed when detaching or attaching the appliance door, do not reach into the hinge – call the after-sales service.

Note: Further information:

21.1 Detaching the appliance door

Requirements
- Have a torch ready.
- Have a screwdriver ready.
- Have a coin ready.

1. To make it easier to see the door lock, shine the torch into the gap beside the appliance door.

2. Hold the screwdriver horizontally ① and use it to push the door lock (black component) on each side of the door upwards as far as it will go ②.

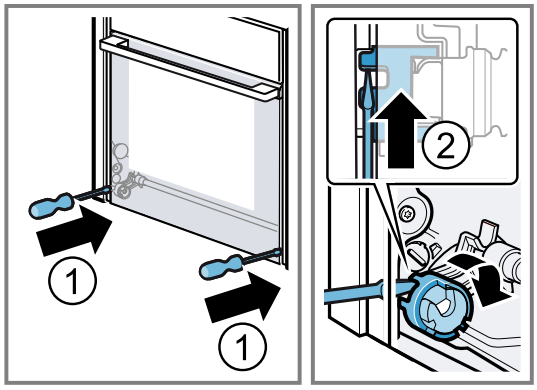

Door lock open	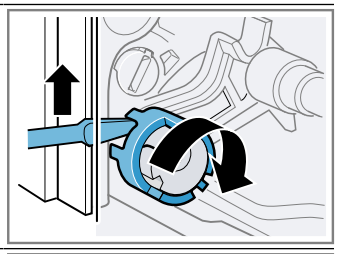
Door lock closed	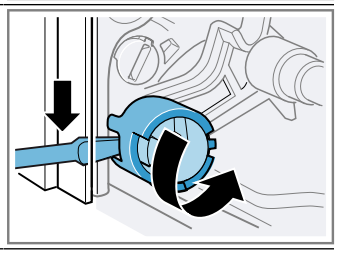

3. Open the appliance door approx. 45° wide.

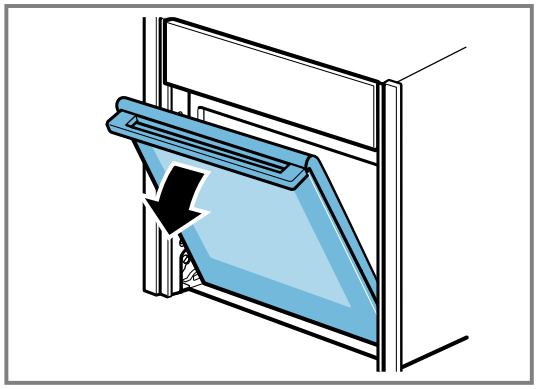

4. Insert the coin in the gap in the lock ① and rotate as far as it will go ②.
   - Turn the lock on the left-hand side in a clockwise direction.
   - Turn the lock on the right-hand side in an anti-clockwise direction.

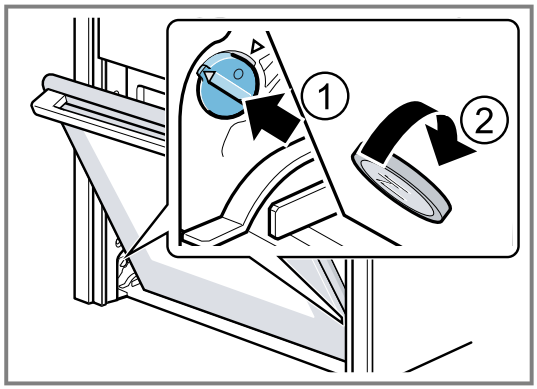

Left-hand lock not secured The arrows do not point to each other	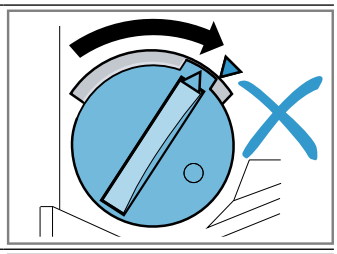
Left-hand lock secured The arrows point to each other	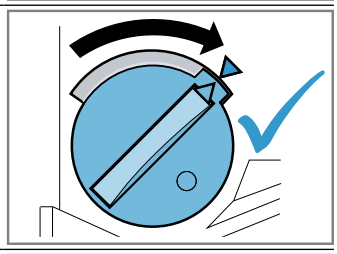
Left-hand lock released	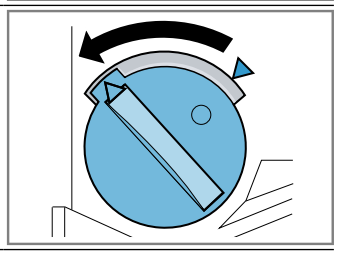

✔ The lock audibly engages.

5. **ATTENTION –** Opening and closing the appliance door when it is in the lock position damages the door hinges.
   - Never force the appliance door open or closed.
   - If the door hinge has been damaged, call the after-sales service.

   Carefully move the appliance door back and forth in the direction of both arrows until you hear a quiet click. You can still only move the appliance door slightly.

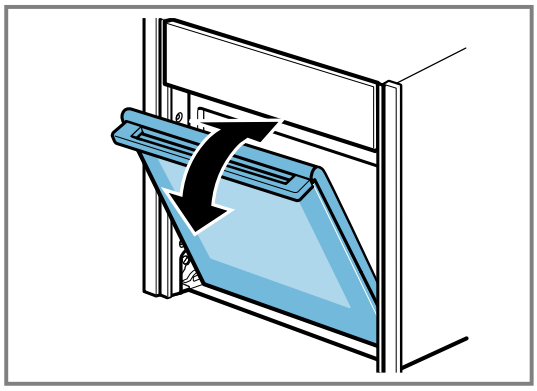

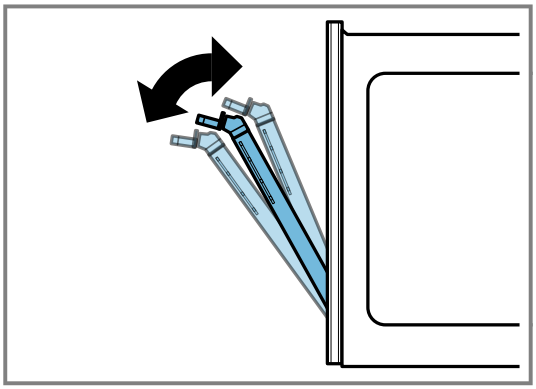

✔ The appliance door is in the lock position.

6. ⚠ **WARNING – Risk of injury!**
   The appliance door has a weight of 7–10 kg and may fall if it is not handled carefully.
   ▸ Handle the appliance door carefully.

   Take hold of the appliance door with both hands, one on the left and one on the right, and at the same time slightly rotate the door handle upwards ① until you are able to pull up the appliance door and remove it ②.

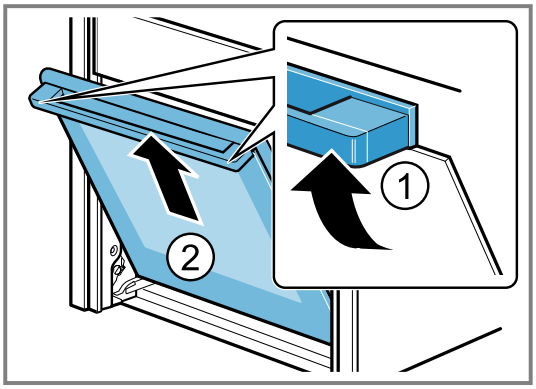

7. Set the appliance door down on a flat, soft, clean surface.

21.2 Attaching the appliance door

1. **Tip:** Ensure that the appliance door is not wedged at an angle and that it is properly fitted in place.
   Attach the appliance door via the left- and right-hand guide rollers simultaneously [a].

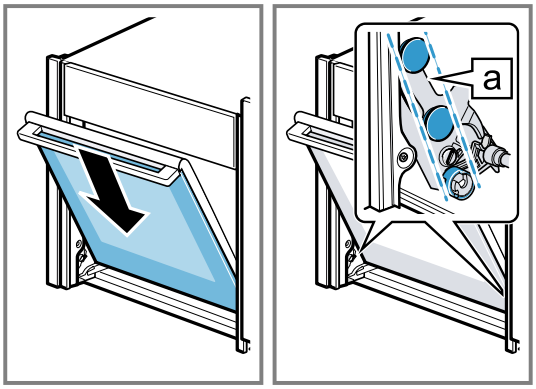

2. Rotate the door handle upwards slightly ①.

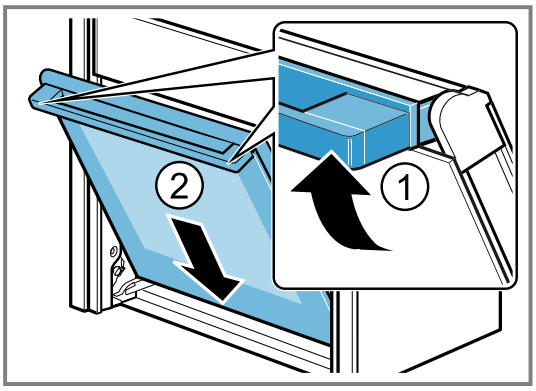

✔ The appliance door will slide the short distance remaining to the bottom ②.

3. Use a coin to release both locks on the appliance door. Insert the coin in the gap in the lock ① and rotate as far as it will go ②.
   ▸ Turn the lock on the left-hand side in an anti-clockwise direction.
   ▸ Turn the lock on the right-hand side in a clockwise direction.

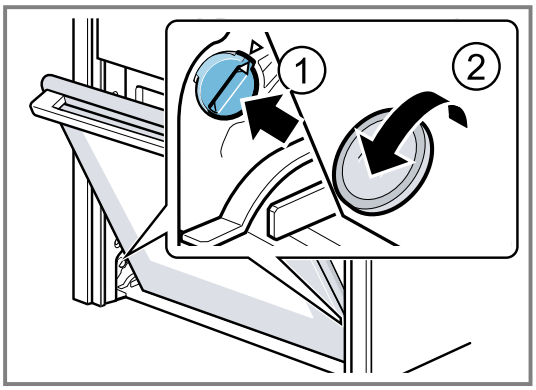

4. Open the appliance door slightly until you hear a quiet click, and then close the appliance door.

5. ⚠ **WARNING – Risk of injury!**
   If the door locks are unsecured, the appliance door may become detached.
   ▸ After attaching the appliance door, close the left- and right-hand door locks.

   Hold the screwdriver horizontally ① and use it to push the door lock (black component) on each side of the door downwards as far as it will go ②.

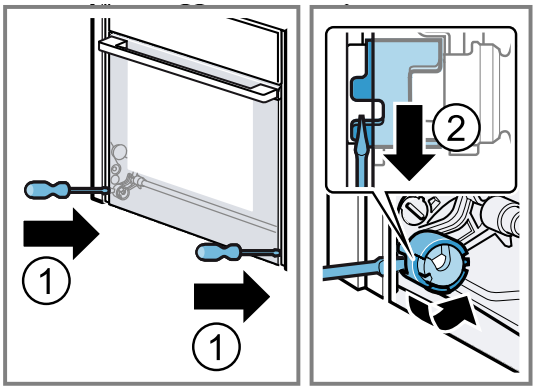

✔ The door lock is closed.

21.3 Removing the door panes

To facilitate cleaning, you can remove the door pane.

⚠ **WARNING – Risk of injury!**
Components inside the appliance door may have sharp edges.
- Wear protective gloves.

Requirements
- Have a screwdriver ready.
- The appliance door is detached.
  → *"Detaching the appliance door", Page 23*

1. Lay the appliance door with the front side facing down on a flat surface that is soft and clean.
2. Undo and remove the left- and right-hand screws on the appliance door.

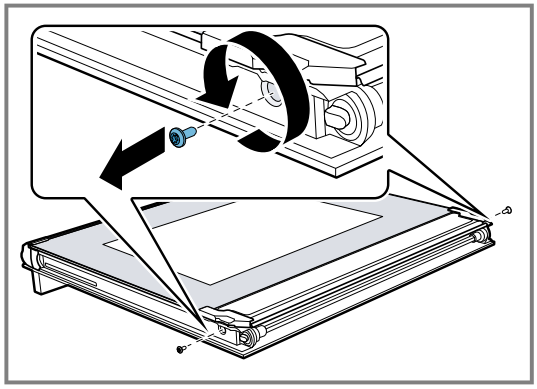

3. Carefully lift the inner pane upwards at an angle ① and remove the holder ⓐ ②.
4. Carefully lift the inner pane upwards at an angle and remove it in the direction of the arrow ③.

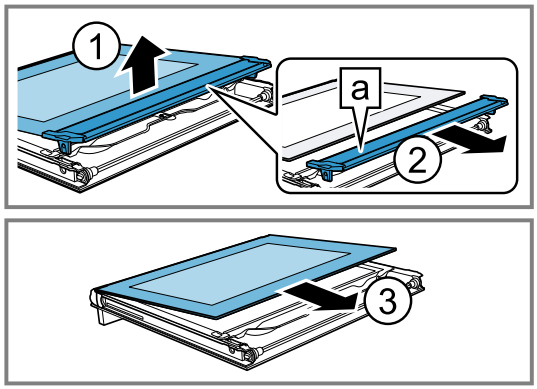

5. Push down on the intermediate pane in the area of ⓐ, and carefully lift the retainer ⓑ until you are able to pull it out.

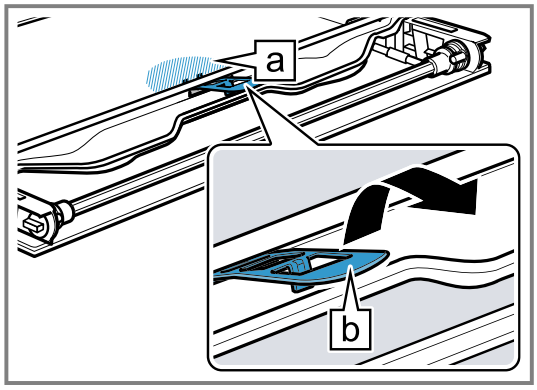

6. Lift the first and second intermediate panes from below ① and remove them in the direction of the arrow ②.

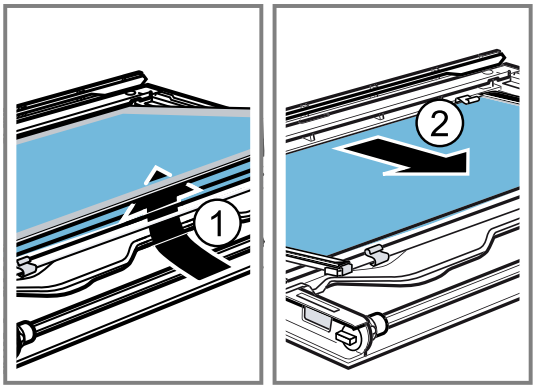

7. Remove the spacers ⓐ and seals ⓑ for cleaning, if required.

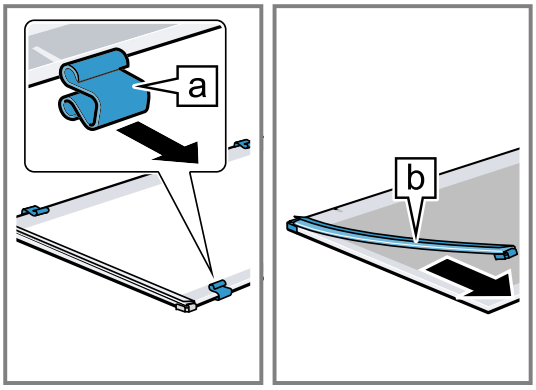

8. ⚠ **WARNING – Risk of injury!**
   Scratched glass in the appliance door may develop into a crack.
   - Do not use any harsh or abrasive cleaners or sharp metal scrapers to clean the glass on the oven door, as they may scratch the surface.

   Clean the door panes on both sides with glass cleaner and a soft cloth.
9. Dry the door panes and refit them.
   → *"Fitting the door panes", Page 26*

21.4 Fitting the door panes

⚠ **WARNING – Risk of injury!**
If a door pane or appliance door has not been installed correctly, this is dangerous.
- Make sure that all of the door panes and the appliance door have been correctly fitted before you switch the appliance back on again.

Tip
The appliance has two different intermediate panels depending on the appliance type.

1. The intermediate panels are marked with a triangle symbol.
   Install the intermediate panel with a filled triangle ▲ first, then the intermediate panel with an unfilled triangle △.
   When fitting the door panes, make sure that they are in the original order.

Insert the intermediate pane so that the ⓐ arrow on the right-hand side is pointing upwards.

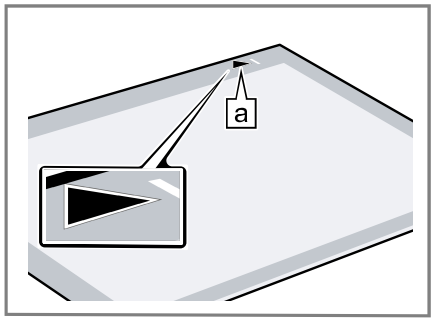

2. Check the fit of the four spacers and two seals.
   - Place the spacers on the centre of the lines ⓐ ①.
   - Secure the seals at the corners ②.

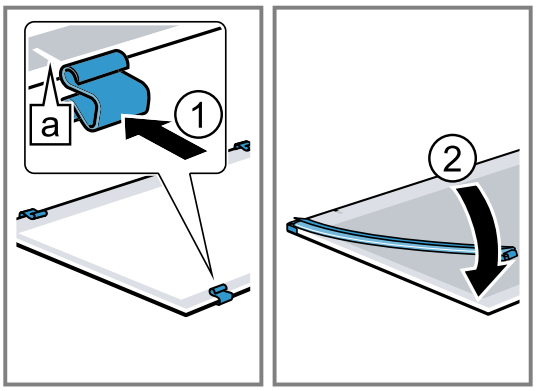

3. Insert the intermediate pane with spacers and seals in the direction of the arrow ①.
   The arrow on the intermediate pane must line up with the arrow on the frame ⓐ.
4. Insert the second intermediate pane without the spacers and seals, and slide it in the direction of the arrow until it is inserted in the frame ②.

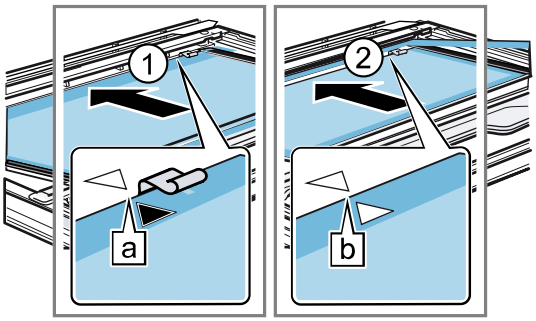

The arrow on the intermediate pane must line up with the arrow on the frame ⓑ.

5. Push down on the intermediate pane around ⓐ, slide the retainer ⓑ in at an angle and push down until it clicks into place.

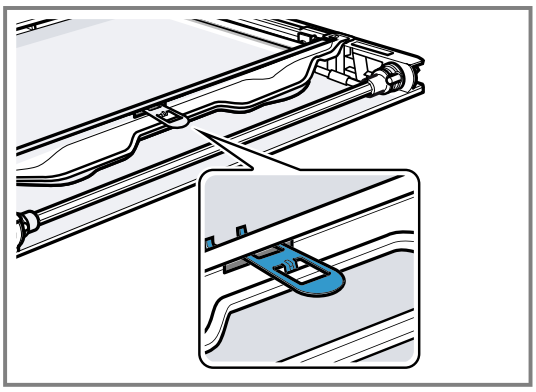

✔ The retainer has been inserted.

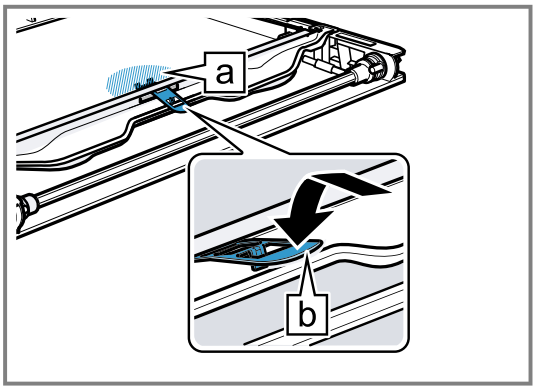

6. Place the inner pane onto the appliance door so that the number ⓐ is legible at the bottom right. Insert the inner pane into the fixing rail ⓑ at an angle towards the back.

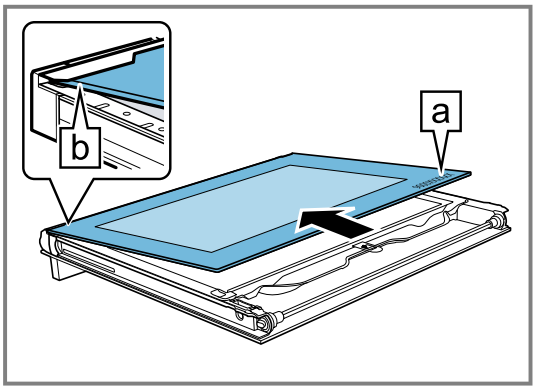

7. Carefully lift the inner pane upwards at an angle and attach the holder ⓐ.

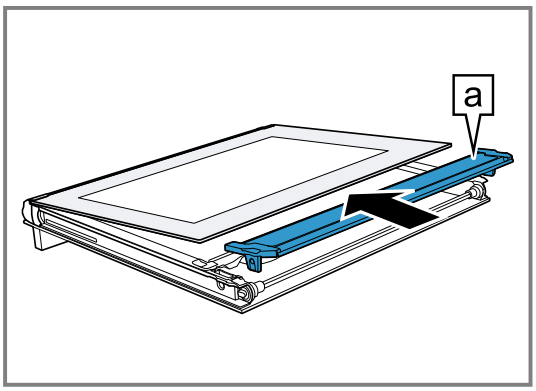

8. Insert the inner pane with the holder ⓐ into the opening.

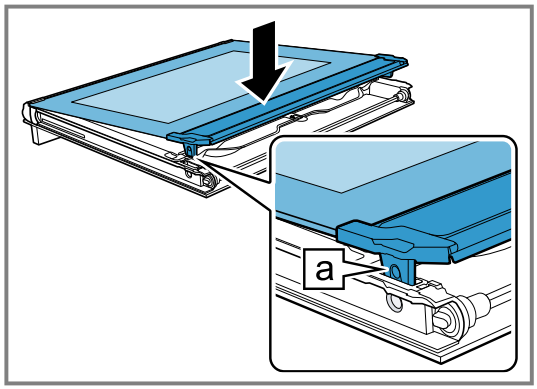

9. Screw both screws back in on the left and right of the appliance door.

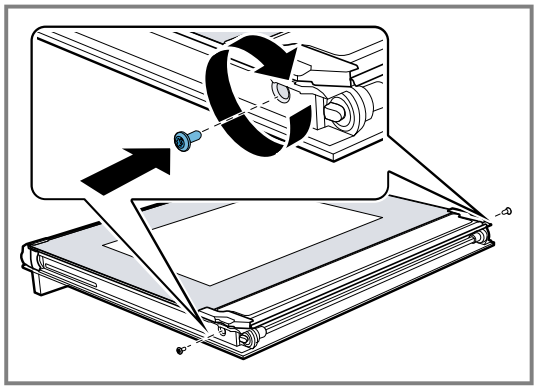

22 Troubleshooting

You can rectify minor faults on your appliance yourself. Read the troubleshooting information before contacting after-sales service. This will avoid unnecessary costs.

Tip: Permanently connect your appliance to the Home Connect app to automatically receive software updates. This allows errors to be eliminated, performance to be improved and new functions to be made available.

⚠ **WARNING – Risk of injury!**
Improper repairs are dangerous.
- Repairs to the appliance should only be carried out by trained specialist staff.
- If the appliance is defective, call Customer Service.
  → *"Customer Service", Page 30*

⚠ **WARNING – Risk of electric shock!**
Improper repairs are dangerous.
- Repairs to the appliance should only be carried out by trained specialist staff.
- Only use genuine spare parts when repairing the appliance.
- If the power cord or the appliance power cable of this appliance is damaged, it must be replaced with a special power cord or special appliance power cable, which is available from the manufacturer or its Customer Service.
- If the power cord of this appliance is damaged, it must be replaced by trained specialist staff.

22.1 Malfunctions

Fault	Cause and troubleshooting
The appliance is not working.	The circuit breaker in the fuse box has tripped. ▸ Check the circuit breaker in the fuse box.
	There has been a power cut. ▸ Check whether the lighting in your room or other appliances are working.
	Electronics fault **1.** Disconnect the appliance from the power supply for at least 30 seconds by switching off the fuse. **2.** Reset the basic settings to the factory settings. → *"Basic settings", Page 16*
"Sprache Deutsch" appears in the display.	There has been a power cut. ▸ Configure the initial configuration settings. → *"Initial use", Page 10*
The operation does not start or is interrupted.	Different causes are possible. ▸ Check the notifications that appear on the display. → *"Displaying information", Page 12*
	Malfunction ▸ Call . → *"Customer Service", Page 30*

Fault	Cause and troubleshooting
Appliance does not heat up.	Demo mode is switched on. **1.** Disconnect the appliance from the power supply for at least 30 seconds by switching off the fuse. **2.** Switch off demo mode in the basic settings within approx. 5 minutes. → *"Changing basic settings", Page 17*
	There has been a power cut. ▸ Open and close the appliance door once after a power failure. ✔ The appliance is checked and is ready to use.
The time is not displayed when the appliance is switched off.	Basic setting has been changed. ▸ Change the basic setting for the clock. → *"Basic settings", Page 16*
Appliance door cannot be opened.	The cleaning function locks the appliance door; 🔒 lights up in the display. ▸ Allow the appliance to cool down until 🔒 goes out in the display. → *"Pyrolytic self-cleaning cleaning function", Page 20*
	The childproof lock locks the appliance door. ▸ Deactivate the childproof lock using "Unlock". → *"Childproof lock", Page 15* You can switch off the lock in the basic settings. → *"Basic settings", Page 16*
Home Connect is not working properly.	Different causes are possible. ▸ Go to *www.home-connect.com*.
The interior lighting does not work.	Basic setting has been changed. ▸ Change the basic setting for the lighting. → *"Basic settings", Page 16*
	The LED light is defective. ▸ Call Customer Service →*Page 30*.
A notification appears on the display confirming that the maximum operating time has been reached.	The maximum operating time has been reached. The appliance stops heating. **1.** Press "OK" to confirm the notification about the maximum operating time. **2.** Check whether you still need the appliance. ▸ Set a cooking time so that the operation does not stop. → *"Time-setting options", Page 12*
The operation stops.	The maximum operating time has been reached. The appliance stops heating. **1.** Press ⏻ to switch off the appliance. **2.** If necessary, press ⏻ to switch the appliance back on and then restart the operation. ▸ Set a cooking time so that the operation does not stop. → *"Time-setting options", Page 12*
Error code made up of letters and numbers appears on the display, e.g. E0111.	The electronics have detected a fault. **1.** Switch the appliance off and on again. ✔ If the fault was a one-off, the message disappears. **2.** If the message appears again, call the after-sales service. Please specify the exact error message when calling. → *"Customer Service", Page 30*
The cooking result is not satisfactory.	Settings were unsuitable. Adjustment values, e.g. temperature or cooking time, depend on the recipe, quantity and food. ▸ Next time, set lower or higher values. **Tip:** A lot of other information about the preparation, corresponding adjustment values and recipes can be found in the Home Connect app or on our website *www.neff-home.com*.
The result of the cleaning function is not satisfactory.	The cooking compartment was too dirty. ▸ Remove coarse dirt from the cooking compartment before using the cleaning function. ▸ Take the shelf supports out of the cooking compartment to save energy and achieve a better cleaning result in the cooking compartment.

Fault	Cause and troubleshooting
The result of the cleaning function is not satisfactory.	▸ Pay attention to the cleaning and care of your appliance. → *"Cleaning and servicing", Page 19*

23 Disposal

23.1 Disposing of old appliance

Valuable raw materials can be reused by recycling.

1. Unplug the appliance from the mains.
2. Cut through the power cord.
3. Dispose of the appliance in an environmentally friendly manner.
   Information about current disposal methods are available from your specialist dealer or local authority.

This appliance is labelled in accordance with European Directive 2012/19/EU concerning used electrical and electronic appliances (waste electrical and electronic equipment - WEEE).
The guideline determines the framework for the return and recycling of used appliances as applicable throughout the EU.

24 Customer Service

Function-relevant genuine spare parts according to the corresponding Ecodesign Directive can be obtained from Customer Service for a period of at least 10 years from the date on which your appliance was placed on the market within the European Economic Area.
Furthermore, our Customer Service will continue to provide you with other function-relevant and storable genuine spare parts for up to 15 years from the date on which your appliance was placed on the market.
For more information, please contact our Customer Service team.
Detailed information about the warranty period and the warranty conditions in your country is available via the QR code on the enclosed document on service contacts and warranty conditions, from our customer service or on our website.
You can find the contact details for our customer service via the QR code on the enclosed document on service contacts and warranty conditions or on our website.
This product contains light sources from energy efficiency class G. These light sources are available as a spare part and should only be replaced by trained specialist staff.

24.1 Product number (E-Nr.), production number (FD) and consecutive numbering (Z-Nr.)

If you contact Customer Service, you will require the product number (E-Nr.), the production number (FD) and the consecutive numbering (Z-Nr.), which you can find on the appliance's rating plate.
The rating plate bearing these numbers can be found on the base of the appliance when you open the appliance door.

Make a note of your appliance's details and the Customer Service telephone number to find them again quickly.
You can also display the appliance information in the basic settings.
→ *"Basic settings", Page 16*

25 Information regarding Free and Open Source Software

This product includes software components that are licensed by the copyright holders as free software or open source software.
The applicable licence information is stored on your home appliance. You can also access the applicable licence information via your Home Connect app: "Profile -> Legal information -> Licence Information".[1] You can also download the licence information on the brand product website. (Please search on the product website for your appliance model and additional documents). Alternatively, you can request the relevant information from ossrequest@bshg.com or BSH Hausgeräte GmbH, Carl-Wery-Str. 34, 81739 Munich, Germany.
The relevant source code will be made available on request.
Please send your request to ossrequest@bshg.com or BSH Hausgeräte GmbH, Carl-Wery-Str.34, 81739 Munich, Germany.
Subject: „OSSREQUEST“
The cost of performing your request will be charged to you. This offer is valid for three years from the date of

[1] Depending on the appliance specifications

purchase or at least as long as we offer support and spare parts for the relevant appliance.

26 Declaration of Conformity

BSH Hausgeräte GmbH hereby declares that the appliance with Home Connect functionality conforms to the essential requirements and other relevant provisions of Directive 2014/53/EU.
A detailed RED Declaration of Conformity can be found online at *www.neff-home.com* among the additional documents on the product page for your appliance.

CE

2.4 GHz band (2400–2483.5 MHz): Max. 100 mW
5-GHz band (5150–5350 MHz + 5470–5725 MHz): max. 150 mW

	BE	BG	CZ	DK	DE	EE	IE	EL	ES
	FR	HR	IT	CY	LI	LV	LT	LU	HU
	MT	NL	AT	PL	PT	RO	SI	SK	FI
	SE	NO	CH	TR	IS	UK (NI)			
5 GHz WLAN (Wi-Fi): For indoor use only.									

AL	BA	MD	ME	MK	RS	UK	UA
5 GHz WLAN (Wi-Fi): For indoor use only.							

26.1 Statement of Compliance for Great Britain

Product type
This statement of compliance covers the products described in this information for use whose model identifier group is seen on the title page. The full model identifier is made up of the characters before the slash in the product number (E no.) which can be found on the rating plate. Alternatively, you can also find the model identifier in the first line of the UK Energy Label.

Name and address of manufacturer
BSH Hausgeräte GmbH, Carl-Wery-Strasse 34, 81739 München, Germany

This statement of compliance is prepared by the manufacturer.

The manufacturer, BSH Hausgeräte GmbH deems that it has complied with
- provision 5.1-1 of ETSI EN 303 645 v2.1.1 and, where relevant, provision 5.1-2 of ETSI EN 303 645 v2.1.1;
- provision 5.2-1 of ETSI EN 303 645 v2.1.1;
- provision 5.3-13 of ETSI EN 303 645 v2.1.1.

Support period
BSH Hausgeräte GmbH will provide security updates that are necessary to maintain the main functions free of charge until at least 28/02/2034.

27 How it works

Here, you can find the ideal settings for various types of food as well as the best accessories and cookware. We have perfectly tailored these recommendations to your appliance.

Tip: A lot of other information about the preparation, corresponding adjustment values and recipes can be found in the Home Connect app or on our website *www.neff-home.com*.

27.1 General cooking tips

Take note of the following information when cooking all types of food.
- The temperature and cooking time depend on the amount of food and the recipe. Settings ranges are specified for this reason. Try using the lower values to start with.
- The setting values apply to food placed in the cooking compartment while the cooking compartment is still cold. If you want to preheat anyway, do not place accessories into the cooking compartment until it has finished preheating.
- Remove any accessories that are not being used from the cooking compartment.

ATTENTION
Acidic food may damage the wire rack
- Do not place acidic food, such as fruit or food with an acidic marinade directly on the wire rack.

Information for those allergic to nickel
In rare cases, small amounts of nickel may pass into the food.
You can buy suitable accessories from customer service, from specialist retailers or online.
→ *"Other accessories", Page 10*

27.2 Baking tips

- Dark-coloured metal baking tins are most suitable for baking cakes, bread and other baked goods.
- Use wide, shallow cookware for bakes and gratins. Food takes longer to cook in deep, narrow cookware and it browns more on top.
- Silicone moulds are not suitable.
- If you are cooking bakes directly in the universal pan, place the universal pan into the cooking compartment at level 2.
- The setting values for bread dough apply to both dough placed on a baking tray and dough placed in a loaf tin.

ATTENTION
When the cooking compartment is hot, any water inside it will create steam. The change in temperature may cause damage.
- ▸ Never pour water into the cooking compartment when it is still hot.
- ▸ Never place cookware containing water on the cooking compartment floor.

Shelf positions

Baking on one level	Height
Tall baked items and tins/dishes on the wire rack	2
Shallow baked items/baking tray	3

Baking on two or more levels	Height
2 levels ▪ Universal pan ▪ Baking tray	3 1
2 levels ▪ Baking tins/dishes on 2 wire racks	3 1
3 levels ▪ Baking tray ▪ Universal pan ▪ Baking tray	4 3 1

Use the CircoTherm hot air heating function.

Note: Items that are placed in the appliance on baking trays or in baking tins/dishes at the same time will not necessarily be ready at the same time.

27.3 Roasting, braising and grilling tips

- The recommended settings are for fridge-temperature food and unstuffed, oven-ready poultry.
- Place the poultry onto the cookware breast-side or skin-side down.
- Turn roasting joints, grilled items or whole fish after approx. ½ to ⅔ of the specified time.

Roasting on the wire rack

Food roasted on the wire rack will become very crispy on all sides. You can roast large poultry, for example, or multiple individual pieces at the same time.

- Roast pieces of a similar weight and thickness. The grilled food will brown evenly and will remain succulent and juicy.
- Place the food to be roasted directly on the wire rack.
- To catch any liquids that drip down, place the universal pan, with the wire rack inside it, into the cooking compartment at the specified shelf height.
- Add up to ½ litre of water to the universal pan, depending on the size and type of food that you want to roast.
  You can make a sauce from the juices that are collected. This also means that less smoke is produced and the cooking compartment does not become as dirty.

Roasting in cookware

If you cover the cookware when you cook your food, this will keep the cooking compartment cleaner.

General information about roasting in cookware

- Use heat-resistant, ovenproof cookware.
- Place the cookware on the wire rack.
- Glass cookware is best.
- Follow the manufacturer's instructions for your roasting dishes.

Roasting in uncovered cookware

- Use a deep roasting dish.
- If you do not have any suitable cookware, you can use the universal pan.

Roasting in covered cookware

- Use a suitable lid that seals well.
- When roasting meat, there should be at least 3 cm between the food and the lid. The meat may expand.

⚠ **WARNING – Risk of scalding!**
Very hot steam may escape when the lid is opened after cooking. Steam may not be visible, depending on the temperature.
- ▸ Lift the lid in such a way that the hot steam can escape away from you.
- ▸ Keep children away from the appliance.

Grilling

Grill food if you want it to be crispy.
The "Grill" type of heating is good for cooking thinner pieces of poultry, meat and fish such as steaks, drumsticks and burgers. It is also excellent for toasting bread.
Circo-roasting is very well suited to cooking whole poultry and fish, as well as meat, e.g. roast pork with crackling.

- When grilling several food items, choose pieces that are of a similar weight and thickness. The grilled food will brown evenly and will remain succulent and juicy.
- Place the food to be grilled directly onto the wire rack.
- To catch any liquids that drip down, place the universal pan into the cooking compartment at least one level below the wire rack.

Notes

- The grill element switches on and off continuously. This is normal. The temperature that you set determines how frequently this occurs.
- Smoke may be produced when grilling.

27.4 Cooking instructions for ready meals

- The cooking result greatly depends on the quality of the food. Pre-browning and irregularities may already be present in the food before cooking.
- Do not use frozen products that are covered with a thick layer of ice. Remove any ice on the food.
- Take ready meals out of the packaging.
- If you are warming or cooking the ready meal in cookware, make sure that the cookware is heat-resistant.
- Distribute foods that are in the form of separate pieces, such as bread rolls and potato products, so that they are spread out flat and evenly on the accessory. Leave a little space between the individual pieces.
- Follow the manufacturer's instructions on the packaging.

27.5 List of foods

Recommended settings for a variety of foods, sorted into food categories.

Recommended settings for various types of food

Food	Accessory/cookware	Height	Type of heating	Temperature in °C	Cooking time in mins
Sponge cake, delicate	Ring-shaped tin or Loaf tin	2		150-170	60-80
Sponge cake, 2 levels	Ring-shaped tin or Loaf tin	3+1		140-150	70-85
Fruit tart or cheesecake with shortcrust pastry base	Springform cake tin, diameter 26 cm	2		170-190	55-80
Sponge flan, 6 eggs	Springform cake tin Ø 28 cm	2		150-160 [1]	30-40
Shortcrust tart with moist topping	Universal pan	3		160-180	55-95
Yeast cake with moist topping	Universal pan	3		180-190	30-55
Swiss roll	Baking tray	3		180-190 [1]	10-15
Muffins	Muffin tray	2		170-190	20-40
Small yeast cakes	Baking tray	3		160-170	25-45
Biscuits	Baking tray	3		140-160	15-25
Biscuits, 2 levels	Universal pan + Baking tray	3+1		140-160	15-30
Biscuits, 3 levels	x 2 Baking tray + Universal pan	4+3+1		140-160	15-30
Bread, 750 g	Universal pan or Loaf tin	2		**1.** 210-220 **2.** 180-190 [1]	**1.** 10-15 **2.** 25-35
Bread, 1500 g	Universal pan or Loaf tin	2		**1.** 210-220 **2.** 180-190 [1]	**1.** 10-15 **2.** 40-50
Flatbread	Universal pan	3		240-250	20-25
Bread rolls, fresh	Baking tray	3		180-190	20-30
Pizza, fresh, on a baking tray	Baking tray	3		190-210	20-30
Pizza, fresh, on a baking tray, 2 levels	Universal pan + Baking tray	3+1		180-190	30-40
Pizza, fresh, thin-crust, on a pizza tray	Pizza tray	2		250-270 [1]	8-13
Börek	Universal pan	1		180-190	40-50
Quiche	Dark coated quiche tin	2		190-210	25-35

[1] Preheat the appliance.

Food	Accessory/cookware	Height	Type of heating	Temperature in °C	Cooking time in mins
Tarte flambée	Universal pan	3		260-270 [1]	10-15
Bake, savoury, cooked ingredients	Ovenproof dish	2		200-220	30-60
Potato gratin, raw ingredients, 4 cm deep	Ovenproof dish	2		150-170	60-80
Chicken, 1.3 kg, unstuffed	Uncovered cookware	2		200-220	60-70
Small chicken portions, 250 g each	Uncovered cookware	3		220-230	30-35
Goose, unstuffed, 3 kg	Uncovered cookware	2		**1.** 140 **2.** 160	**1.** 130-140 **2.** 50-60
Joint of pork without rind, e.g. neck, 1.5 kg	Uncovered cookware	2		190-200	120-150
Pork loin, lean, 1 kg	Flat glass dish	2		180	90-120
Fillet of beef, medium, 1 kg	Wire rack + Universal pan	3		210-220	40-50 [2]
Pot-roasted beef, 1.5 kg [3]	Covered cookware	2		200-220	130-150
Sirloin, medium, 1.5 kg	Wire rack + Universal pan	3		200-220	60-70 [2]
Burger, 3–4 cm thick	Wire rack	4		290	25-30 [4]
Leg of lamb, boned, medium, 1.5 kg [5]	Uncovered cookware	2		170-190	70-80 [6]
Fish, grilled, whole, 300 g, e.g. trout [7]	Wire rack	2		160-180	20-30
Fish, braised, whole, 300 g, e.g. trout	Covered cookware	2		170-190	30-40
Fish, braised, whole, 1.5 kg, e.g. salmon	Covered cookware	2		180-200	55-65

Yoghurt

Use your appliance to make yoghurt.

Making yoghurt

1. Remove the accessories and shelves from the cooking compartment.
2. Heat 1 litre of whole milk (3.5% fat) to 90 °C on the hob and then leave it to cool down to 40 °C.
   It is sufficient to heat UHT milk to 40 °C.
3. Mix 150 g of chilled yoghurt into the milk.
4. Pour the mixture into small containers, e.g. cups or small jars.
5. Cover the containers with film, e.g. cling film.
6. Place the containers on the cooking compartment floor.
7. Use the recommended settings when configuring the appliance settings.
8. After making the yoghurt, leave it to cool in the refrigerator for at least 12 hours.

Recommended settings for desserts and compote

Food	Accessory/cookware	Height	Type of heating	Temperature in °C	Cooking time in mins
Yoghurt	Individual moulds	Cooking compartment floor		40-45	8–9 hrs

[1] Preheat the appliance.
[2] Turn the dish between halfway and two-thirds through the cooking time.
[3] At the start, add liquid to the cookware so that at least 2/3 of the joint is covered in liquid
[4] Turn the dish 2/3 of the way through the cooking time.
[5] Pour water into the dish so that it covers the base.
[6] Do not turn the food.
[7] Slide the universal pan underneath the wire rack.

27.6 Special cooking methods and other applications

Information and recommended settings for special cooking methods and other applications, e.g. low-temperature cooking.

Air Fry

Cook food with Air Fry until crispy and with little fat. Air Fry is particularly suitable for meals that are normally fried in oil.

Cooking tips for Air Fry

Observe this information when cooking food with Air Fry.

- Only one level can be used when cooking with Air Fry.
- You can achieve the crispiest results using the enamelled Air Fry tray. The perforated surface enables extremely good air circulation around the food. If the Air Fry tray is not included with the appliance as standard, you can obtain the Air Fry tray as an optional accessory.
- Do not preheat the oven.
- Do not use greaseproof paper. The air must circulate in the cooking compartment.
- Do not defrost frozen food.
- Cover the Air Fry tray or the universal pan evenly with the food. If possible, only distribute the food on the accessory in a single layer.
- Insert the accessory into the cooking compartment at level 3. If you use the Air Fry tray, you can insert an empty universal pan at level 1 to protect against dirt.
- Turn the food halfway through cooking. If you are cooking larger quantities, turn the food twice.

Tip: Do not season the food until after you have cooked it. This makes the food crispier.
Breaded vegetables are also suitable for cooking with Air Fry. To save fat, use a sprayer to spray the coating with oil. This forms a crispy crust with little fat.

Recommended settings for Air Fry

Food	Accessory/cookware	Height	Type of heating	Temperature in °C	Cooking time in mins
Chips	Air Fry tray or Universal pan	3		180-200	15-20
Potato pockets, filled	Air Fry tray or Universal pan	3		180-200	15-20
Potato rösti, frozen	Air Fry tray or Universal pan	3		180-200	15-20
Chicken goujons, nuggets, frozen	Air Fry tray or Universal pan	3		180-200	8-12
Fish fingers	Air Fry tray or Universal pan	3		180-200	10-20
Broccoli, breaded	Air Fry tray or Universal pan	3		180-200	10-20

27.7 Meals and tips for cooking for Great Britain

Recommended settings for meals with British cooking habits.

Also follow the instructions in the individual sections. This section contains only special additional information relating to British meals and cooking habits.

Baking

Recommended settings for baking on one level

Food	Accessory/cookware	Height	Type of heating	Temperature in °C	Cooking time in mins
Victoria sponge cake	x 2 20 cm diameter cake tin	2		150-170 [1]	15-25
Rich fruit cake	Deep, 23 cm diameter tin	2		140-150	180-210
Fruit pie	20 cm diameter plate or	2		160-170	55-70

[1] Preheat the appliance.

Food	Accessory/cookware	Height	Type of heating	Temperature in °C	Cooking time in mins
	Pie tin				
Bread or white bread	Loaf tin, 1 x 900 g or 2 x 450 g	2		200-210 [1]	25-40
Scones	Baking sheet on wire rack	3		200-210 [1]	8-12
Biscuits	Baking sheet on wire rack	3		140-160 [1]	10-25
Small cakes	12-cup-tin	3		150 [2]	25-35
Pavlova	Baking sheet on wire rack	3		100-110	150-180
Yorkshire pudding	12-cup-tin	3		200-220 [3]	15-25

Recommended settings for baking on several levels

Food	Accessory/cookware	Height	Type of heating	Temperature in °C	Cooking time in mins
Victoria sponge cake, 2 levels	x 4 20 cm diameter cake tin	3+1		150-160 [1]	20-30
Biscuits, 2 levels	x 2 Baking sheet on wire rack	3+1		140-160 [1]	15-30
Biscuits, 3 levels	x 3 Baking sheet on wire rack	4+3+1		140-160 [1]	15-30

Grilling

Recommended settings for meat

Food	Accessory/cookware	Height	Type of heating	Temperature in °C	Cooking time in mins
Pork, Bacon rashers [4]	Wire rack	3		290 [5]	**1.** 4-5 **2.** 3-4 [6]
Pork, Sausages, thickness 2-4 cm	Wire rack	3		275 [7]	10-20 [8]
Pork, Gammon joint	Uncovered cookware	2		170-180	25+20 [9]

Recommended settings for poultry

Food	Accessory/cookware	Height	Type of heating	Temperature in °C	Cooking time in mins
Chicken, whole [4]	Wire rack	2		170-180	25+20

Roasting and braising

Cooking tips for roasting and braising

Follow this information when frying or braising poultry or meat.

Calculating the cooking time, e.g. 20+35:

- To calculate the cooking time, assume 20 minutes per 500 g of meat. Then add an extra 35 minutes to that figure.
- For 1.5 kg, the cooking time would therefore be 95 minutes.

[1] Preheat the appliance.
[2] Preheat the appliance for five minutes. Do not use the rapid heating function.
[3] Preheat the appliance for 20 minutes.
[4] Slide the universal pan underneath the wire rack.
[5] Preheat the appliance for 5 minutes.
[6] Turn the food occasionally.
[7] Preheat the appliance for 3 minutes.
[8] Turn the food several times.
[9] Do not turn the food.

Cooking time range, e.g. 10-15:

- Your food will be ready within the specified range of time (in minutes).

Recommended settings for meat

Food	Accessory/cookware	Height	Type of heating	Temperature in °C	Cooking time in mins
Beef, Top side, Top rump	Uncovered cookware	2		170	40+30
Lamb, Leg, bone-in	Uncovered cookware	2		160-170	25+15
Pork, Belly	Uncovered cookware	2	**1.** **2.**	**1.** 170-180 **2.** 251	**1.** 30+30 **2.** 3-5

Recommended settings for poultry

Food	Accessory/cookware	Height	Type of heating	Temperature in °C	Cooking time in mins
Chicken, whole [1]	Wire rack	2		170-180	25+15
Turkey, crown	Wire rack	2		140-150	20+25
Turkey, whole, 4-8 kg	Wire rack	2		150-160	12+12 [2]

Recommended settings for bakes

Food	Accessory/cookware	Height	Type of heating	Temperature in °C	Cooking time in mins
Diced meat, e.g. beef, pork, lamb, 500 g meat	Covered cookware	2		140	120-140

Recommended settings for complete meals

Food	Accessory/cookware	Height	Type of heating	Temperature in °C	Cooking time in mins
Complete meal with Chicken [1]	x 2 Wire rack + Universal pan	4+1		**1.** 180 **2.** Then 200 (Yorkshire pudding)	Chicken: (25+25) + 20

27.8 Test dishes

The information in this section is provided for test institutes to facilitate testing of the appliance in accordance with EN 60350-1.

Baking

- The setting values apply to food that is placed into a cold cooking compartment.
- Take note of the information on preheating in the recommended settings tables. These setting values apply without rapid heat-up.
- For baking, use the lower of the temperatures indicated first.
- Items that are placed in the appliance on baking trays or in baking tins/dishes at the same time will not necessarily be ready at the same time.
- Shelf positions when baking on 2 levels:
  - Universal pan: Shelf position 3
    Baking tray: Shelf position 1
  - Baking tins on the wire rack:
    First wire rack: Shelf position 3
    Second wire rack: Shelf position 1
- Shelf positions when baking on 3 levels:
  - Baking tray: Shelf position 4
  - Universal pan: Shelf position 3
  - Baking tray: Shelf position 1
- Hot water sponge cake
  - When baking on 2 levels, place the springform tins each in the centre of the wire racks.
  - As an alternative to a pan support, you can also use the Air Fry baking tray offered by us.

Recommended settings for baking

Food	Accessory/cookware	Height	Type of heating	Temperature in °C	Cooking time in mins
Shortbread	Baking tray	3		140-150 [3]	25-35

[1] Slide the universal pan underneath the wire rack.
[2] Turn the food after approx. one hour.
[3] Preheat the appliance for five minutes. Do not use the rapid heating function.

Food	Accessory/cookware	Height	Type of heating	Temperature in °C	Cooking time in mins
Shortbread	Baking tray	3		140 [1]	28-38
Shortbread, 2 levels	Universal pan + Baking tray	3+1		140 [1]	30-40
Shortbread, 3 levels	x 2 Baking tray + Universal pan	4+3+1		130-140 [1]	35-55
Small cakes	Baking tray	3		150 [1]	25-35
Small cakes	Baking tray	3		150 [1]	20-30
Small cakes	Baking tray	3		160 [2]	20-30
Small cakes, 2 levels	Universal pan + Baking tray	3+1		150 [1]	25-35
Small cakes, 3 levels	x 2 Baking tray + Universal pan	4+3+1		140 [1]	30-45
Hot water sponge cake	Springform cake tin, diameter 26 cm	2		160-170 [3]	25-35
Hot water sponge cake	Springform cake tin, diameter 26 cm	2		160-170 [2]	30-40
Hot water sponge cake, 2 levels	x 2 Springform cake tin, diameter 26 cm	3+1		150-160 [3]	35-50
Apple pie, x 2	x 2 Springform cake tin, diameter 20 cm	2		180-190 [2]	75-90

Grilling

Recommended settings for grilling

Food	Accessory/cookware	Height	Type of heating	Temperature in °C	Cooking time in mins
Toasting bread	Wire rack	4		290 [2]	5-6

28 Installation instructions

Observe this information when installing the appliance.

mm

[1] Preheat the appliance for five minutes. Do not use the rapid heating function.
[2] Do not preheat the appliance.
[3] Preheat the appliance. Do not use the rapid heating function.

28.1 Scope of delivery

After unpacking all parts, check for any damage in transit and completeness of the delivery.

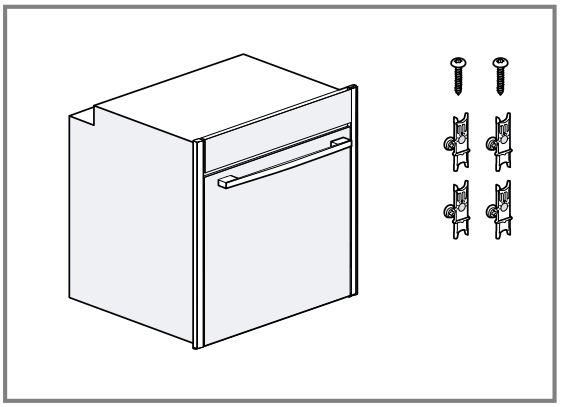

⚠ 28.2 General installation instructions

Follow these instructions before you start installing the appliance.

- The safe operation of this appliance can only be guaranteed if it has been installed to a professional standard in accordance with these installation instructions. The installer shall be liable for damages incurred as a result of incorrect installation.
- Do not use the door handle for the transport or installation.
- Check the appliance for damage after unpacking it. Do not connect the appliance if it has been damaged in transit.
- Before starting up the appliance, remove any packaging material and adhesive film from the cooking compartment and the door.
- Proceed in accordance with the installation sheets for installing accessories.
- Fitted units must be heat-resistant up to 95 °C, and adjacent unit fronts up to 70 °C.
- Do not install the appliance behind a decorative door or the door of a kitchen unit. There is a risk of overheating.
- Cut-out work on the units should be carried out before installing the appliance. Remove any shavings. Otherwise, the correct operation of electrical components may be adversely affected.
- The appliance may be installed at a height of less than 850 mm above the floor.
- Position the appliance on a horizontal surface.
- The mains socket for the appliance must either be located in the hatched area ⓐ or outside of the area where the appliance is installed.

  Any unsecured units must be secured to the wall using a standard bracket ⓑ.

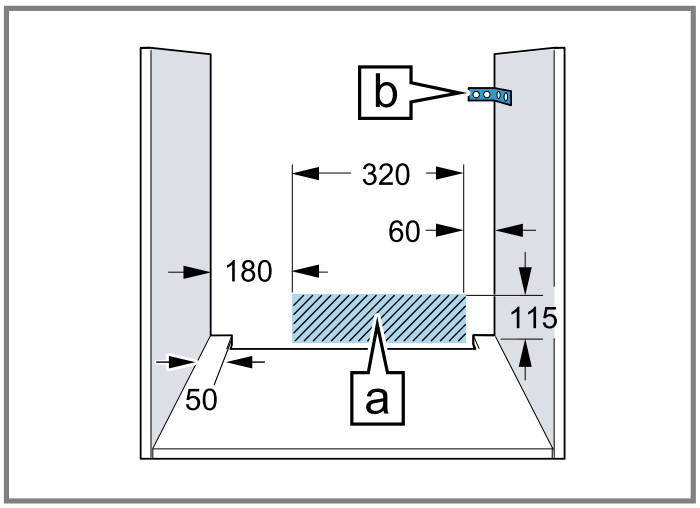

- Wear protective gloves so that you do not cut yourself. Parts that are accessible during installation may have sharp edges.
- Dimensions of the figures in mm.

⚠ WARNING – Risk of electric shock!

Once the appliance has been installed, the openings in the back panel of the appliance must not be accessible to children, not even through the drawers and kitchen cabinets underneath. This must be ensured through the installation. In the case of an island unit, a closed back panel is required.

⚠ WARNING – Risk of fire!

It is dangerous to use an extended power cord and non-approved adapters.

- ▸ Do not use extension cables or multiple socket strips.
- ▸ Only use adapters and power cords approved by the manufacturer.
- ▸ If the power cord is too short and a longer one is not available, please contact an electrician to have the domestic installation adapted.

ATTENTION

Carrying the appliance by the door handle could break it. The door handle cannot support the weight of the appliance.

- ▸ Do not carry or hold the appliance by the door handle.

28.3 Appliance dimensions

You will find the dimensions of the appliance here

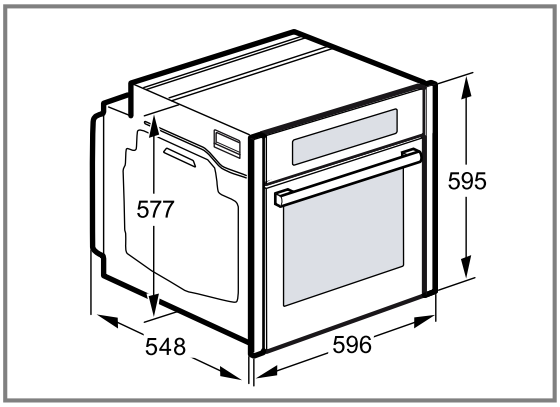

28.4 Installation below a worktop

Observe the installation dimensions and the installation instructions when installing below a worktop.

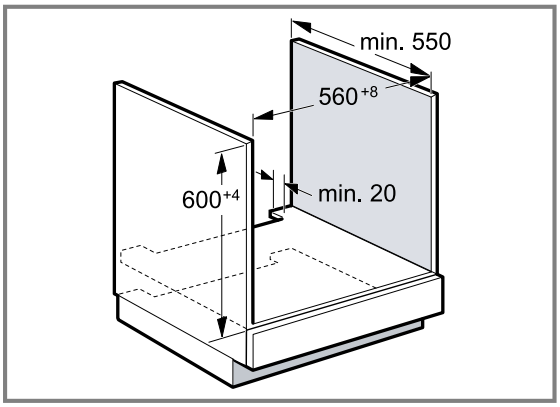

- To ventilate the appliance, the intermediate floor must have a ventilation cut-out.
- The worktop must be secured to the fitted unit.
- Observe any available installation instructions for the hob.
- Observe different national installation instructions for the hob.
- Observe the worktop depth of min. 600 mm.
- When installing under a gas hob, ensure that the appliance does not come into contact with the gas connection of the gas hob.
- If necessary, call a qualified specialist for gas installation.

28.5 Installation underneath a hob

If the appliance is installed under a hob, the following minimum dimensions must be adhered to (including substructure, if applicable).

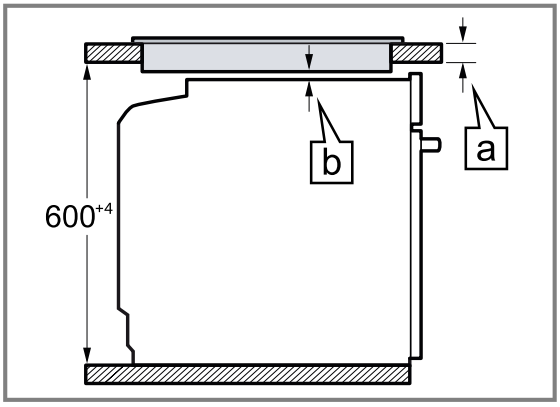

The minimum worktop thickness ⓑ a is based on the required minimum clearance ⓐ.

Hob type	a raised in mm	a flush in mm	b in mm
Induction hob	37	38	5
Full-surface induction hob	47	48	5
Gas hob	27	38	5 [1]
Electric hob	27	30	2

[1] Observe different national installation instructions for the hob.

28.6 Installation in a tall unit

Observe the installation dimensions and the installation instructions when installing in a tall unit.

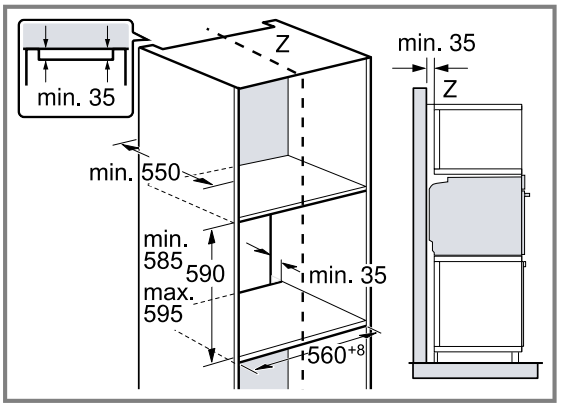

- To ventilate the appliance, the intermediate floors must have a ventilation cut-out.
- Only fit the appliance up to a height which allows accessories to be easily removed.

28.7 Installing two appliances on top of each other

Your appliance can also be installed above or below another appliance. Observe the installation dimensions and the installation instructions when installing appliances on top of each other.

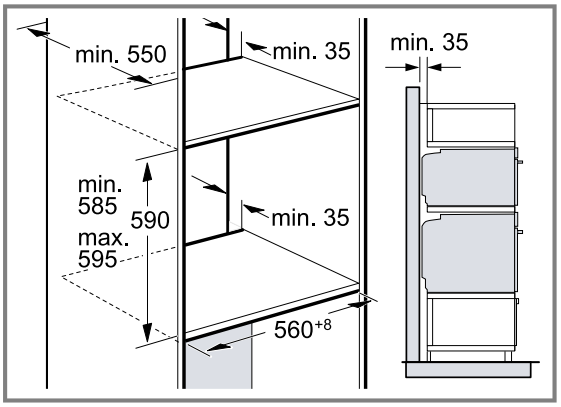

- To ventilate the appliances, the intermediate floor must have a ventilation cut-out.
- To ensure sufficient ventilation of the two appliances, there must be a ventilation opening of at least 200 cm² in the base area. To do this, trim the base panel or fit a ventilation grille.
- Ensure that air exchange is guaranteed in accordance with the diagram.

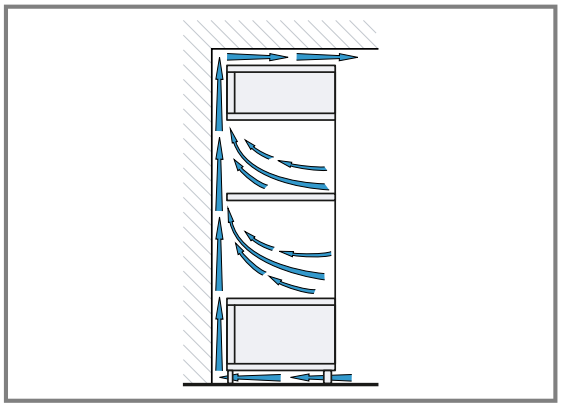

- Only fit appliances up to a height that allows accessories to be easily removed.

28.8 Corner installation

Observe the installation dimensions and the installation instructions when installing in a corner.

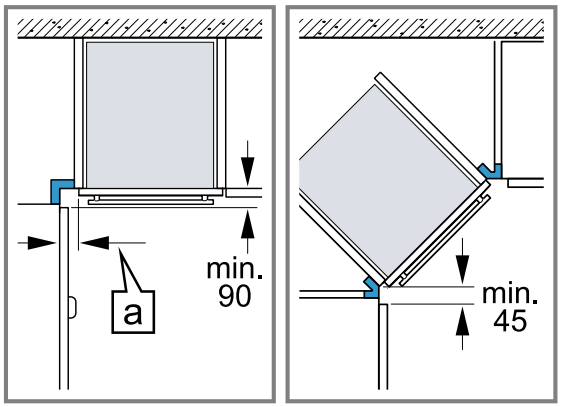

- To ensure that the appliance door can be opened, you must take the minimum dimensions into consideration when installing in a corner. The dimension a is dependent on the thickness of the unit front and the handle.

28.9 Electrical connection

In order to safely connect the appliance to the electrical system, follow these instructions.

- The appliance corresponds to protection class I and must only be operated with a protective earth connection.
- The fuse protection must correspond to the power rating specified on the appliance's rating plate and to the local regulations.
- The appliance must be disconnected from the power supply whenever installation work is being carried out.
- The appliance must only be connected using the power cable provided.

- The power cable must be plugged in at the rear of the appliance until you hear a clicking sound. A 3 m power cable can be obtained from customer service.

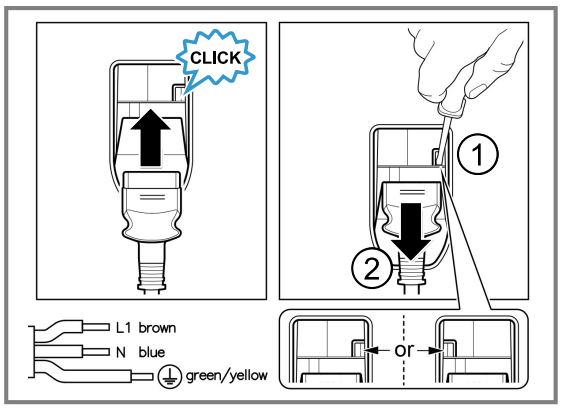

- The power cable must only be replaced with a cable from the original manufacturer. This is available from after-sales service.
- Contact protection must be guaranteed by the installation.
- If the display on the appliance remains dark, it has not been connected correctly. Disconnect the appliance from the mains and check the connection.

Electrically connect the appliance with the protective contact plug

Note: The appliance must only be connected to a protective contact socket that has been correctly installed.

- Insert the plug into the protective contact socket. When the appliance is installed, the mains plug of the power cord must be freely accessible. If free access is not possible, an isolating switch must be integrated into the permanent electrical installation according to the installation regulations.

Electrically connecting an appliance without a protective contact plug

Note: Only licensed specialists may connect the appliance. Damage caused by incorrect connection is not covered under the warranty.
An isolating switch must be integrated into the permanent electrical installation according to the installation regulations.

1. Identify the phase and neutral conductors in the socket.
   The appliance may be damaged if it is not connected correctly.
2. Connect the hob in accordance with the connection diagram.
   See the rating plate for the voltage.
3. Connect the wires of the mains power cable according to the colour coding:
   - Green/yellow = Protective conductor ⏚
   - Blue = Neutral conductor
   - Brown = Phase (external conductor)

28.10 Installing the appliance

Note: The transit bolts must be kept in case the appliance is transported at a later time.

1. Open the appliance door slightly and pull the red triangular transport locks to the outside.
2. Push the appliance in fully.
   Do not kink or trap the connection cable, or route it over sharp edges.
3. Centre the appliance.

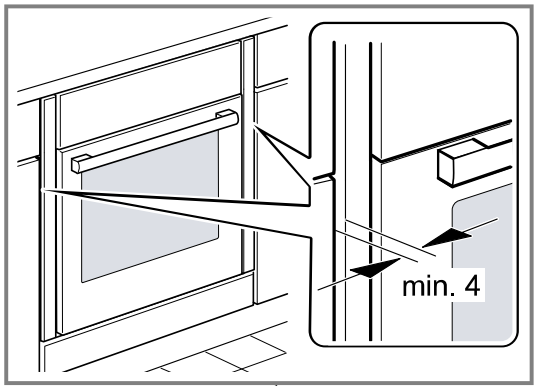

   There must be an air gap of at least 4 mm between the appliance and adjacent unit fronts.
4. Slide a plastic tool, e.g. one of the other fastening elements, into the gap between the appliance and the panel.
5. Pull the tool from the appliance with panel; a clicking noise can be heard when this is loosened.

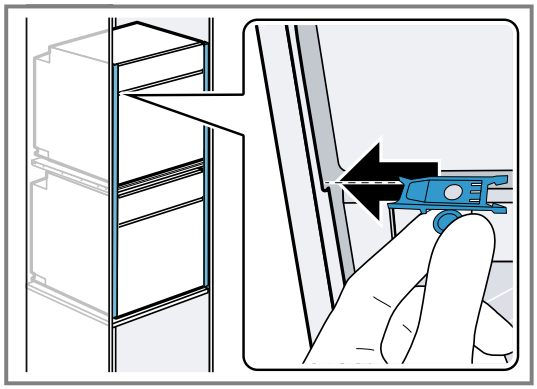

6. Screw the appliance into place.

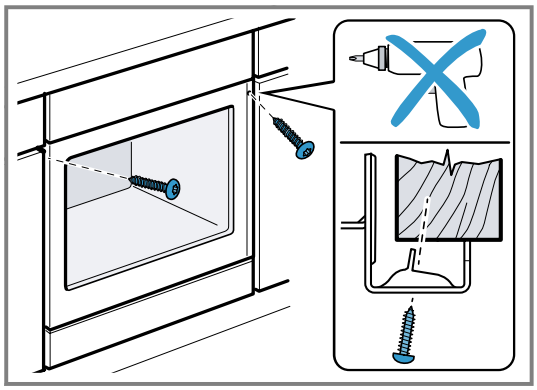

7. → *"Switching the fastening elements", Page 43*

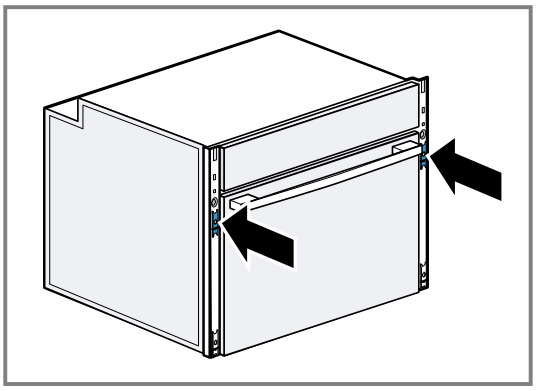

8. Push on the left- and right-hand panels at the height of the fastening elements until a clicking sound is heard.
   - The panel with the sticker is intended for the left-hand side of the inside.

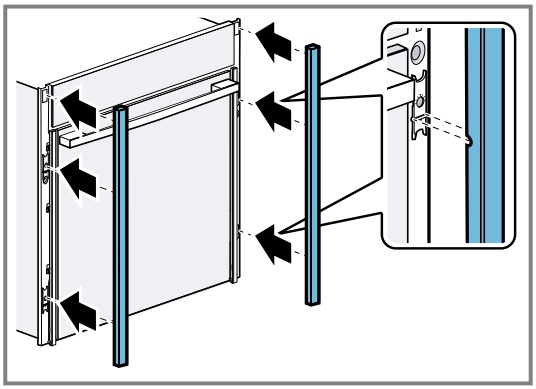

✔ The panels are engaged.

9. Check whether the left- and right-hand panels are vertically aligned.
10. If necessary, align the panels. → *Page 44*

Note: The gap between the worktop and the appliance must not be closed by additional battens.
Thermal insulation strips must not be fitted to the side panels of the surround unit.

28.11 For handleless kitchens with vertical bar handle strips:

1. Attach a suitable filling piece on both sides in order to cover any sharp edges and to guarantee safe installation.

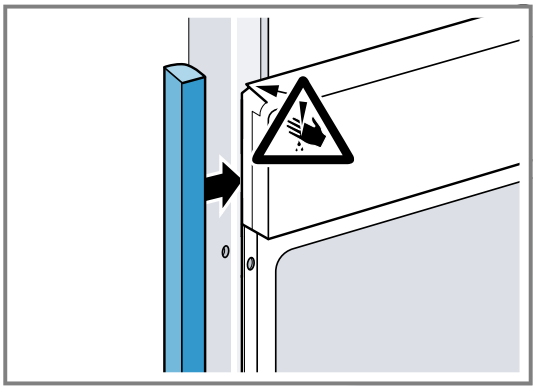

2. Secure the filling piece to the unit.
3. Pre-drill the filling piece and the unit to establish a screw connection.

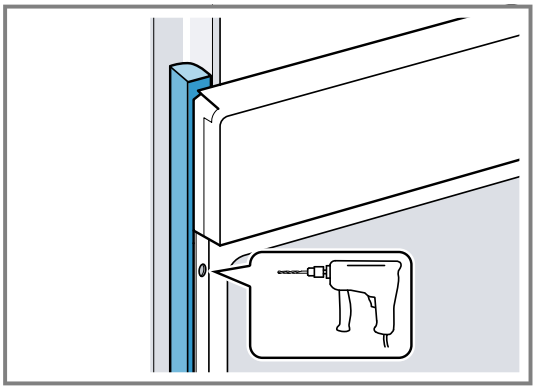

4. Secure the appliance using a suitable screw.

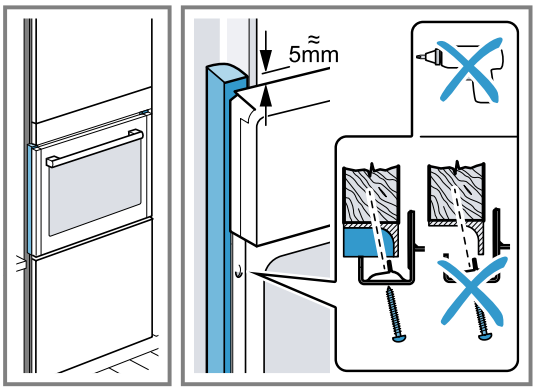

28.12 Switching the fastening elements

In order to attach the panels, the two fastening elements must first be switched.

1. The two upper green fastening elements must be removed.
   The two upper green fastening elements are no longer needed.
2. Pull the two green fastening elements forwards ① until they disengage, slide them up ② and remove them.

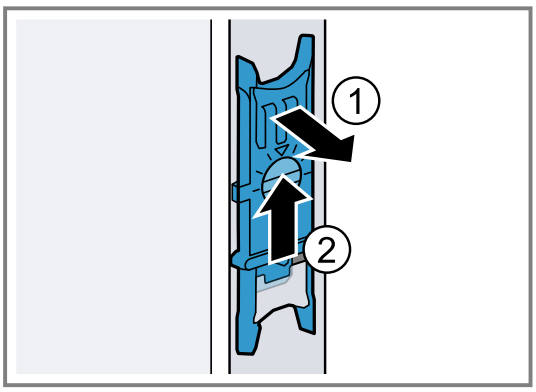

3. Attach the two red fastening elements.
4. Push the eccentric forwards from the fastening element ①.
5. Push the eccentric backwards from the fastening element ②.

✔ The eccentric stops.

6. Push the eccentric backwards into the fastening element ③.

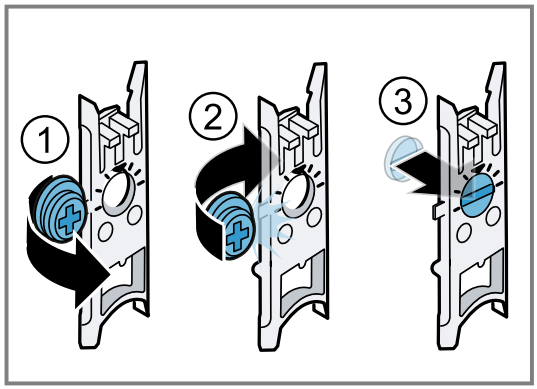

Attach the red fastening elements at the top.

7. Slide in the fastening element at the bottom ① and press down at the top ② until it clicks into place.

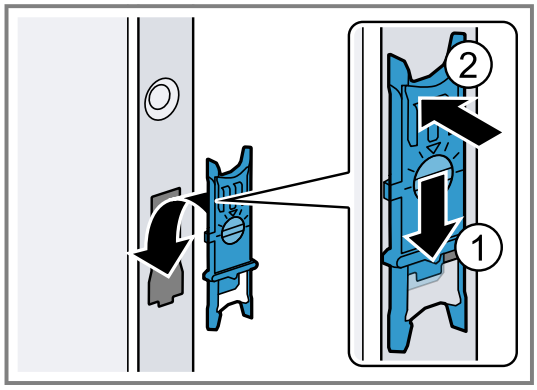

Removing the door handle and side panels

ATTENTION
Unsuitable tools may damage the surface of the appliance.
- Only use plastic tools.
- Do not use pointed or sharp tools.

1. Loosen the screws on the door handle and remove the door handle.
2. Remove the left- and right-hand panels using a plastic tool.

28.13 Aligning the panels

ATTENTION
Unsuitable tools may damage the surface of the appliance.
- Only use plastic tools.
- Do not use pointed or sharp tools.

1. Slide a plastic tool, e.g. one of the other fastening elements, into the gap between the appliance and the panel.
2. Pull the tool from the appliance with panel; a clicking noise can be heard when this is loosened.

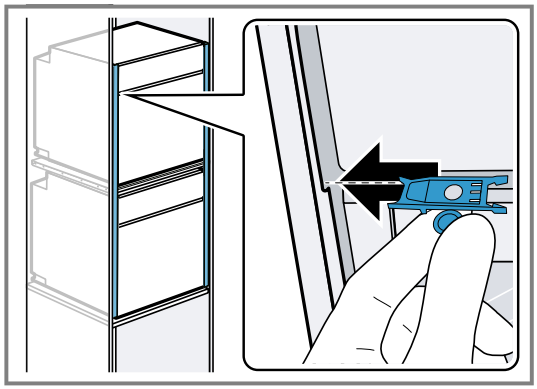

3. Turn the fastening element to the left or right to adjust the alignment of the panels.

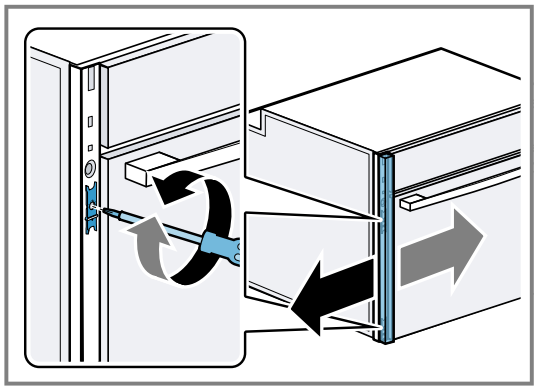

4. Refit the panels.

28.14 Removing the door handle and side panels

ATTENTION
Unsuitable tools may damage the surface of the appliance.
- Only use plastic tools.
- Do not use pointed or sharp tools.

1. Loosen the screws on the door handle and remove the door handle.
2. Remove the left- and right-hand panels using a plastic tool.

28.15 Removing the appliance

1. Disconnect the appliance from the power supply.
2. Remove the left- and right-hand panels.
3. Undo the fastening screws.
4. Lift the appliance slightly and pull it out completely.

Neff Home Connect App

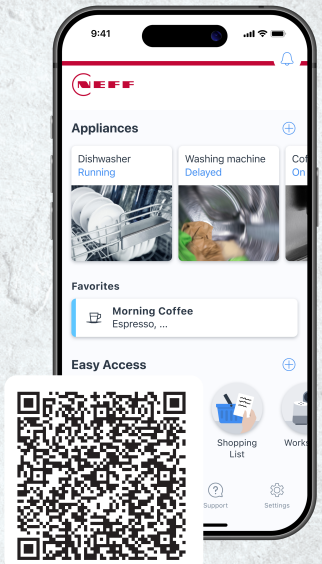

Connect your home appliance today and enjoy the following benefits:

- **Enjoy smart control and have easy access to device information - from anywhere, even per voice.**
- **Optimize product performance with regular software updates, cooking assistance and feature explanation.**
- **Improve product care thanks to useful maintenance and cleaning reminders and a device status dashboard.**

Register your product online
neff-home.com

BSH Hausgeräte GmbH
Carl-Wery-Straße 34
81739 München, GERMANY

9002070404 (060331) REG25
en